SUZUKI

PARTS CATALOGUE

GSX1300RAL4

(CK131)

Hayabusa

E99

2013-10

1ST EDITION

GSX1300RAL4

AJP

GSX1300RAL4

AA3

GSX1300RAL4

AGS

PREFACE

When it becomes necessary to replace parts on SUZUKI MOTORCYCLES, always use SUZUKI GENUINE PARTS which have passed a strict inspection which guarantees quality and performance.

This parts catalogue covers the list of all service parts for SUZUKI GSX1300RAL4.

INSTRUCTIONS FOR QUOTING THE CATALOGUE

1. DIMENSIONS

Dimensions of the parts in this catalogue are indicated in unit millimeters.

2. ABBREVIATIONS

Abbreviations used in this catalogue are as follows:

AR	: As required	NT	: Number of teeth
ASSY	: Assembly	OPT	: Optional
E.NO.	: Engine number	OS	: Over size
F.NO.	: Frame number	STD	: Standard
D	: Diameter of material	T	: Thickness
ID	: Inside diameter	US	: Under size
OD	: Outside diameter	W	: Width
L	: Length		
LH	: Left hand side		
RH	: Right hand side		

～100045 : Up to F.NO.100045
100046～ : From F.NO.100046

12 x 34 x 5.6····· Figures in the description column show the dimensions of parts.
ID OD T(or W,L)

→12345-56781 (Parts No.) : indicates that the parts number was changed to 12345-56781 and the new parts are interchangeable with the former ones but the former ones are not interchangeable with new ones.

←12345-56781 (Parts No.) : indicates that the former and new parts are interchangeable with each other and both are usable.

3. INNER PARTS OF ASSEMBLY

Part name with a dot (.) in front as shown in the description column indicates the component of the assembly also available individually.

4. MODIFICATION NOTICE

A parts bulletin will be sent to you on all occasions when changes in parts occur, including interchangeable modifications between new parts and old ones.

5. NOTE

5-1. There are some different parts from those of production models among spare parts for the administrative reasons and common use of them with other models.

5-2. In respect of rubber hoses and vinyl tubes, please be sure to use them by cutting off according to the length mentioned on parts catalogue or what is actually required on the vehicle.

5-3. Note that the drawings on the illustration page are for ready reference of spare parts number, not to be used as an assembly manual. When assembling, use "SUZUKI SERVICE MANUAL".

6. SPECIFICATION CODE

This catalogue contains the parts for the model designed for the following spec.;
spec. code : E99.

7. SERIAL FRAME NUMBER

GSX1300RAL4(E99) : JS1CK131BE0100001～

COLOR CHART
TABLEAU DES COULEURS

COLOR NO. NO DE COULEUR	COLOR DESCRIPTION DESCRIPTION DE COULEUR	COLOR NO. NO DE COULEUR	COLOR DESCRIPTION DESCRIPTION DE COULEUR
AA3	YLF,YVB	YHF	PHANTOM GRAY METALLIC
AGS	YVZ,YWW	YHG	00RT GRAY METALLIC
AHX	PRL.GLACIER WHITE	YKY	PEARL VIGOR BLUE
AJP	YKY,YWW	YLF	THUNDER GRAY METALLIC
AV8	YMD,YLF,YVB	YMD	MISTIC SILVER METALLIC
AV9	1KK,YWW,YVZ	YVB	GLASS SPARKLE BLACK
AWF	YHG,YWW,YKY	YVZ	PEARL MIRA RED
AWG	YMD,PPR,YVB	YWW	PEARL GLACIER WHITE
AWH	YWW,YHF,YVZ	019	BLACK
AWJ	YWW,PPR,YKY	1KK	LEGATE GOLD
AWK	YVB,YMD,PPR,PPU,PPV,YES,YLF	17U	GRAY METALLIC
AWL	YVZ,1KK,YHF,PPS,PPT,PPR,YWW	291	BLACK (SEMI-GLOSS)
AWM	YKY,YHG,PPR,PPU,PPV,YES,YWW	5PK	BLACK
EJY	U6H,6BY	6BY	BLACK
PPR	T.ZIPANGU GOLD	6UX	GL.SPARKLE BLACK
PPS	MET.MAT PHANTOM GRAY		
PPT	MET.HALFMAT PHANTOM GRAY		
PPU	T.MAT ZIPANGU GOLD		
PPV	MICRO METAL GOLD NO2		
U6H	BLACK (LEATHER)		
YAP	SHADOW BLACK METALLIC		
YES	MICRO METAL SILVER		

COLOR NO. NO DE COULEUR	COLOR DESCRIPTION DESCRIPTION DE COULEUR	COLOR NO. NO DE COULEUR	COLOR DESCRIPTION DESCRIPTION DE COULEUR

MILLIMETER → INCH CONVERSION CHART

	0	1	2	3	4	5	6	7	8	9
00	.000	.039	.079	.118	.157	.197	.236	.276	.315	.354
10	.394	.433	.472	.512	.551	.591	.630	.669	.709	.748
20	.787	.827	.866	.906	.945	.984	1.024	1.063	1.102	1.142
30	1.181	1.220	1.260	1.299	1.339	1.378	1.417	1.457	1.496	1.535
40	1.575	1.614	1.654	1.693	1.732	1.772	1.811	1.850	1.890	1.929
50	1.969	2.008	2.047	2.087	2.126	2.165	2.205	2.214	2.283	2.323
60	2.362	2.402	2.441	2.480	2.520	2.559	2.598	2.638	2.677	2.717
70	2.756	2.795	2.835	2.874	2.913	2.953	2.992	3.031	3.071	3.110
80	3.150	3.189	3.228	3.268	3.307	3.346	3.386	3.425	3.465	3.504
90	3.543	3.583	3.622	3.661	3.701	3.740	3.780	3.819	3.858	3.898

How to read

	0	1	2	3	4
00	…	…	…	…	…
10	…	…	…	…	…
20	…	…	…	0.906	…
30	…	…	…	…	…

23 millimeters equal 0.906 inch

Contents are subject to change without notice or obligation.

FIG.1

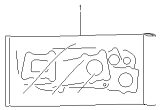

GSX1300RAL4_E99_001
GASKET SET

FIG.2

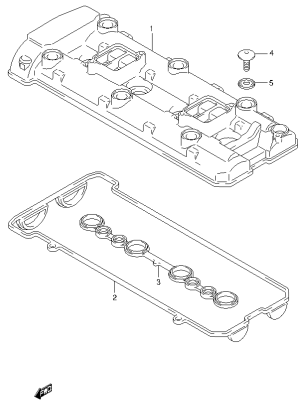

GSX1300RAL4_E99_002
CYLINDER HEAD COVER

FIG.3

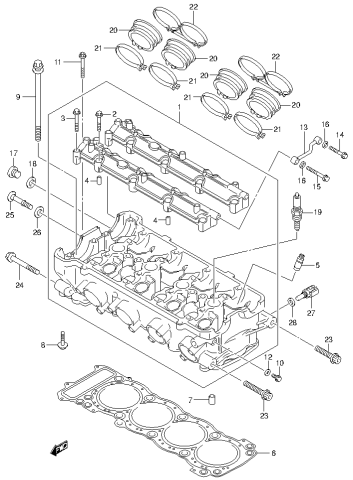

GSX1300RAL4_E99_003
CYLINDER HEAD

FIG.4

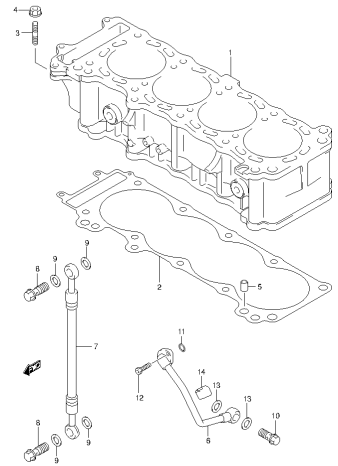

GSX1300RAL4_E99_004
CYLINDER

FIG.5

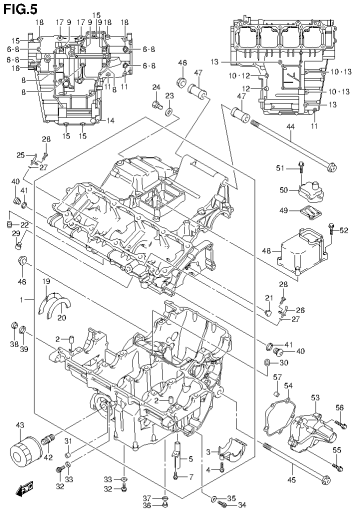

GSX1300RAL4_E99_005
CRANKCASE

FIG.6

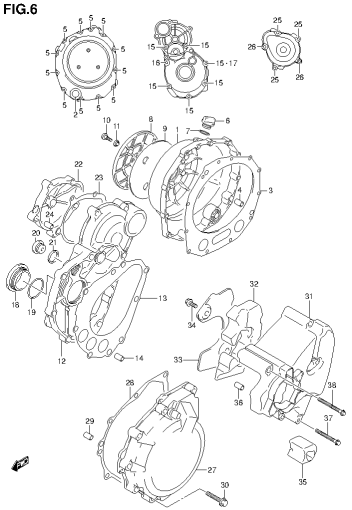

GSX1300RAL4_E99_006
CRANKCASE COVER

FIG.7

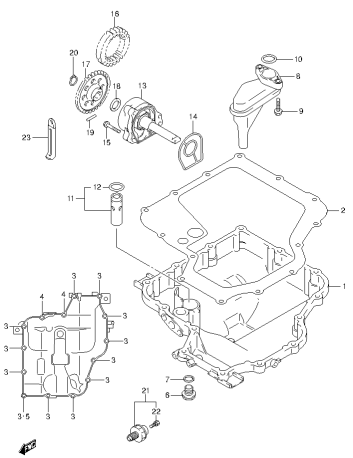

GSX1300RAL4_E99_007
OIL PAN/OIL PUMP

FIG.8

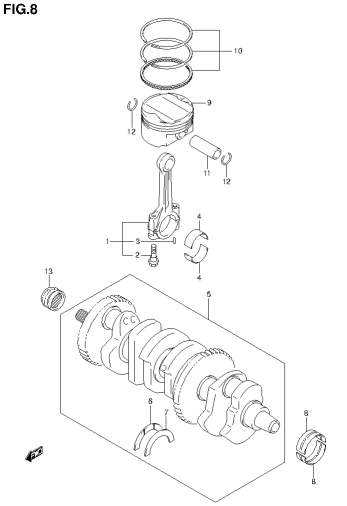

GSX1300RAL4_E99_008
CRANKSHAFT

FIG.9

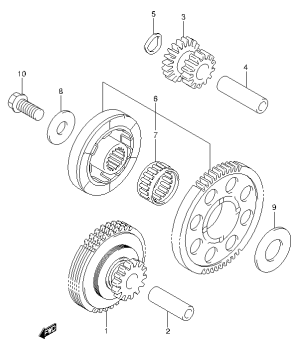

GSX1300RAL4_E99_009
STARTER CLUTCH

FIG.10

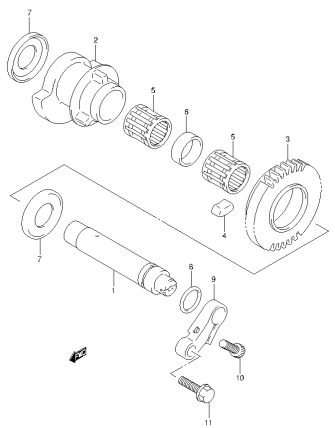

GSX1300RAL4_E99_010
CRANK BALANCER

FIG.11

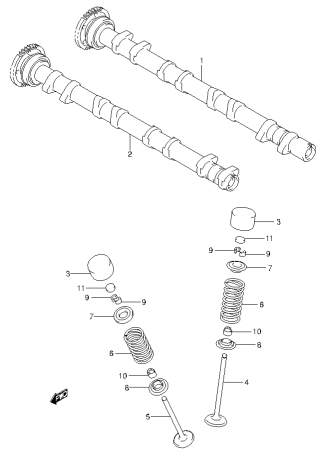

GSX1300RAL4_E99_011
CAMSHAFT/VALVE

FIG.12

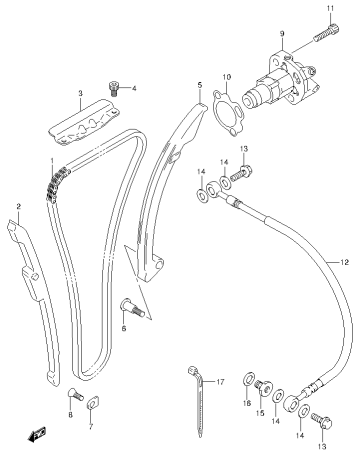

GSX1300RAL4_E99_012
CAM CHAIN

FIG.13

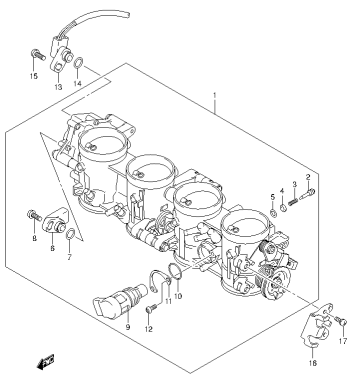

GSX1300RAL4_E99_013
THROTTLE BODY

FIG.14

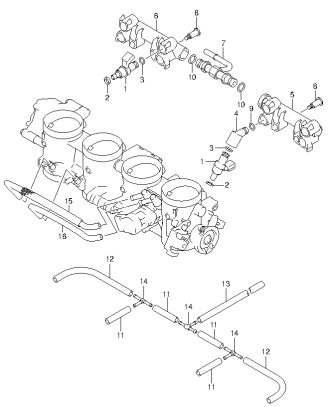

GSX1300RAL4_E99_014
THROTTLE BODY HOSE/JOINT

FIG.15

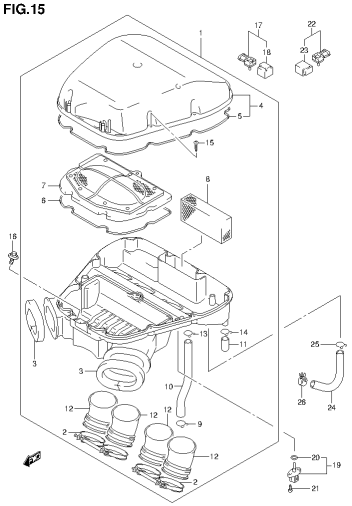

GSX1300RAL4_E99_015
AIR CLEANER

FIG.16

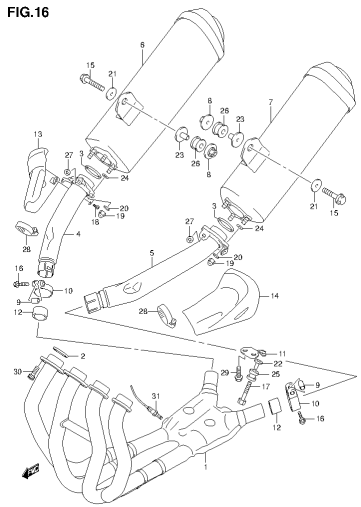

GSX1300RAL4_E99_016
MUFFLER

FIG.17

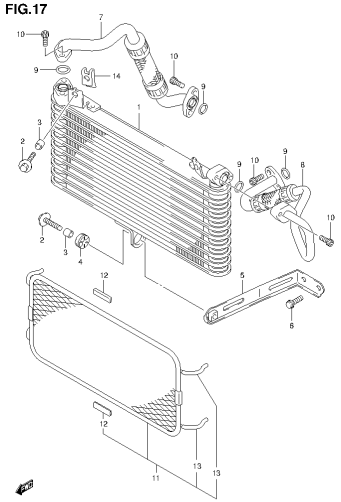

GSX1300RAL4_E99_017
OIL COOLER

FIG.18

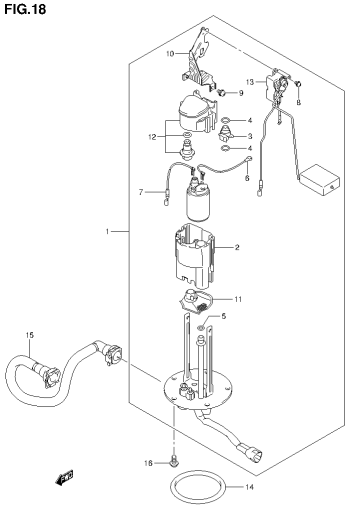

GSX1300RAL4_E99_018
FUEL PUMP

FIG.19

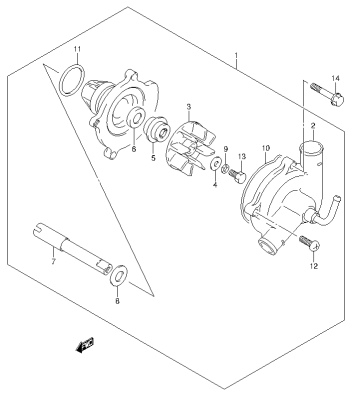

GSX1300RAL4_E99_019
WATER PUMP

FIG.20

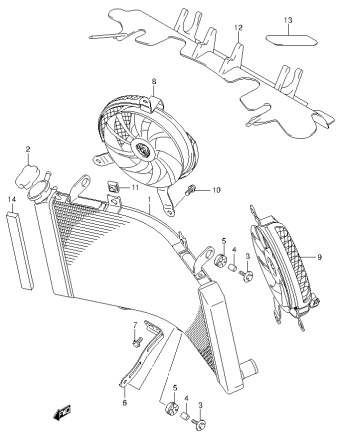

GSX1300RAL4_E99_020
RADIATOR

FIG.21

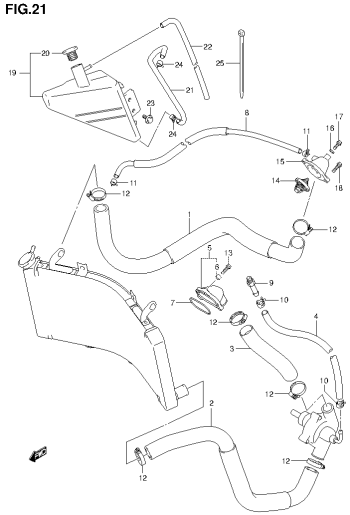

GSX1300RAL4_E99_021
RADIATOR HOSE

FIG.22

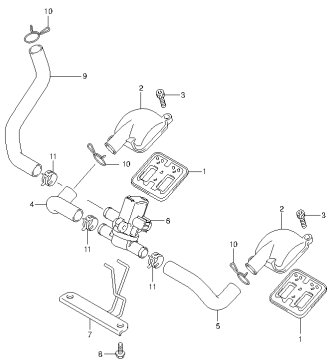

GSX1300RAL4_E99_022
2ND AIR

FIG.23

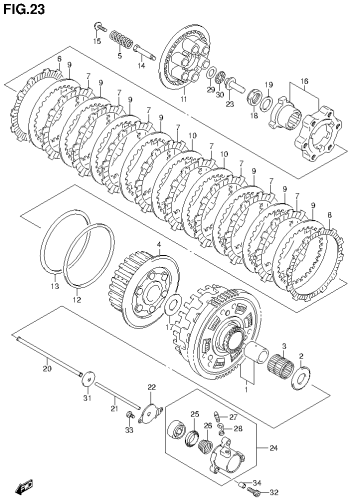

GSX1300RAL4_E99_023
CLUTCH

FIG.24

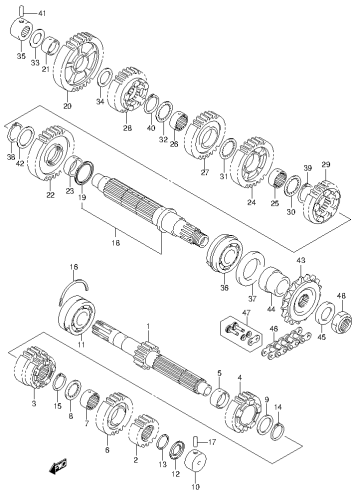

GSX1300RAL4_E99_024
TRANSMISSION

FIG.25

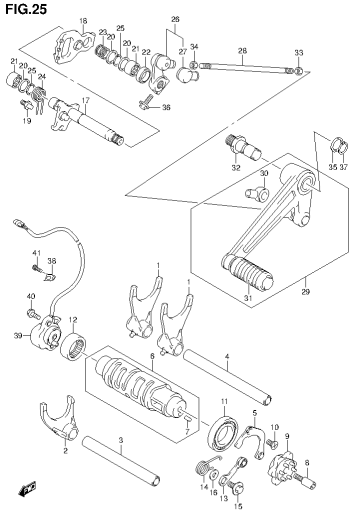

GSX1300RAL4_E99_025
GEAR SHIFTING

FIG.26

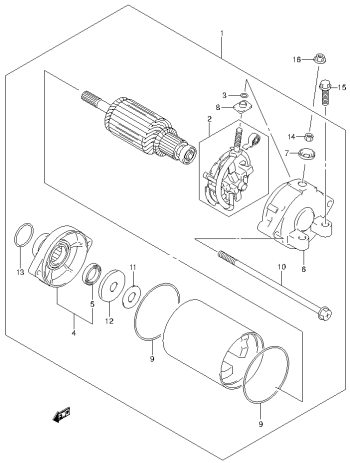

GSX1300RAL4_E99_026
STARTING MOTOR

FIG.27

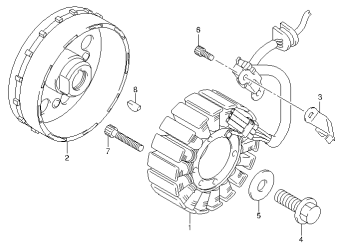

GSX1300RAL4_E99_027
MAGNETO

FIG.28

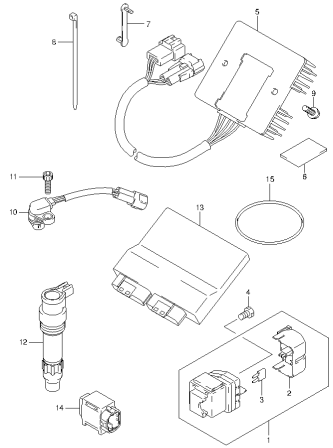

GSX1300RAL4_E99_028
ELECTRICAL

FIG.29

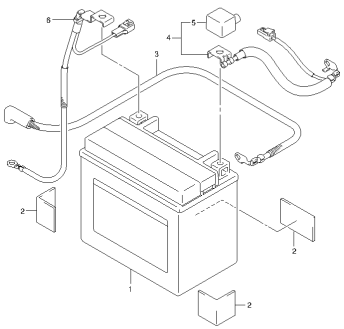

GSX1300RAL4_E99_029
BATTERY

FIG.30

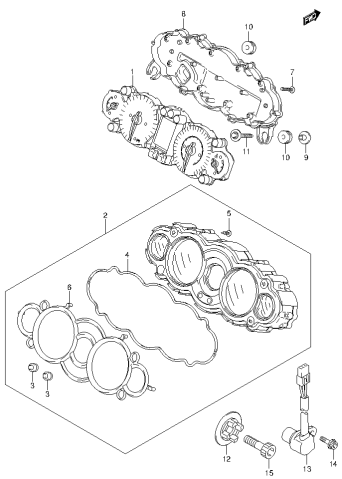

GSX1300RAL4_E99_030
SPEEDOMETER

FIG.31

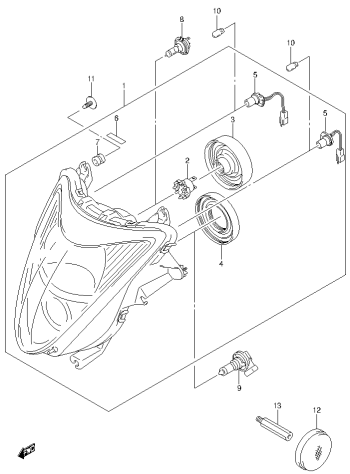

GSX1300RAL4_E99_031
HEADLAMP

FIG.32

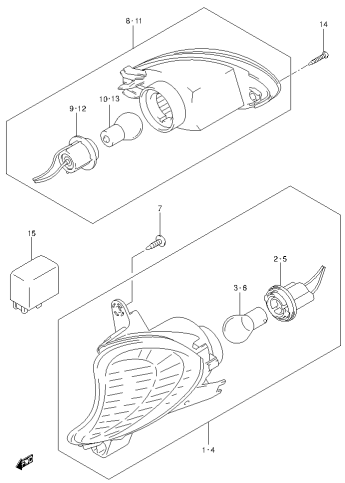

GSX1300RAL4_E99_032
TURNSIGNAL LAMP

FIG.33

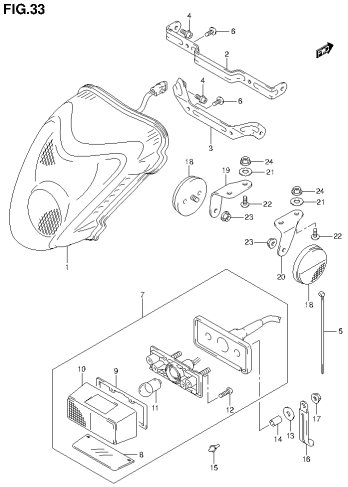

GSX1300RAL4_E99_033
REAR COMBINATION LAMP

FIG.34

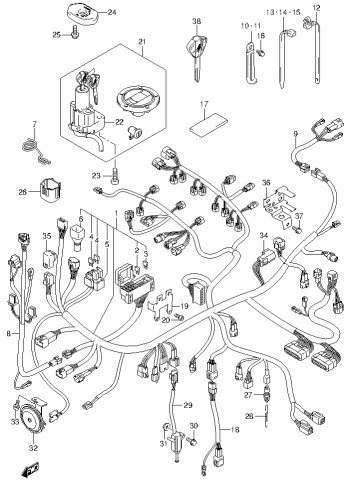

GSX1300RAL4_E99_034
WIRING HARNESS

FIG.35

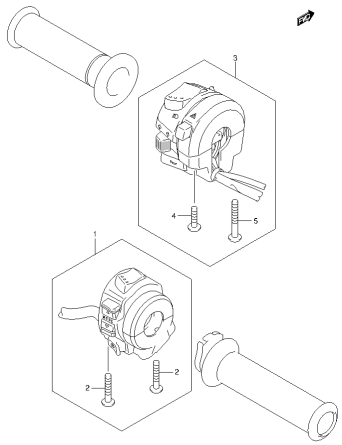

GSX1300RAL4_E99_035
HANDLE SWITCH

FIG.36

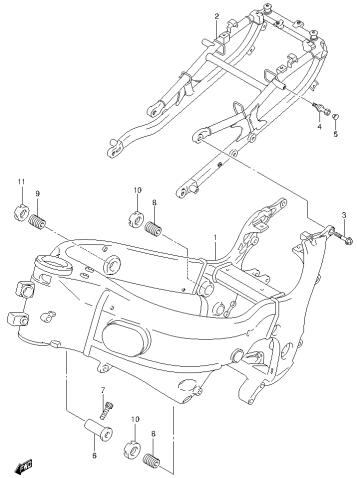

GSX1300RAL4_E99_036
FRAME

FIG.37

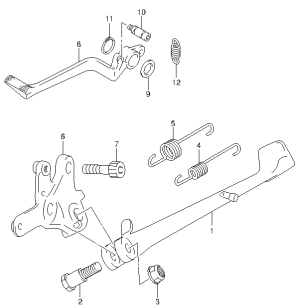

GSX1300RAL4_E99_037
STAND

FIG.38

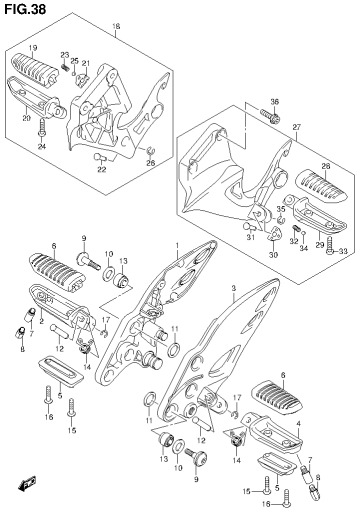

GSX1300RAL4_E99_038
FOOTREST

FIG.39

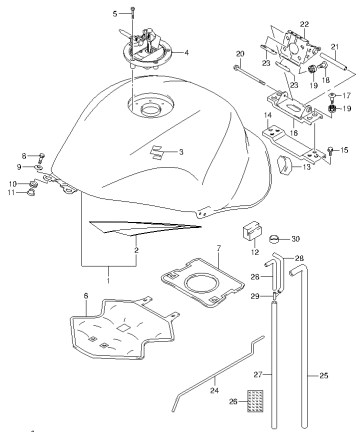

GSX1300RAL4_E99_039
FUEL TANK

FIG.40

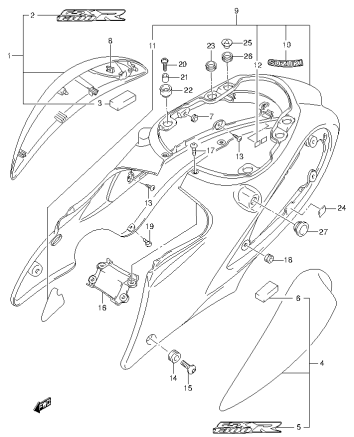

GSX1300RAL4_E99_040
FRAME COVER

FIG.41

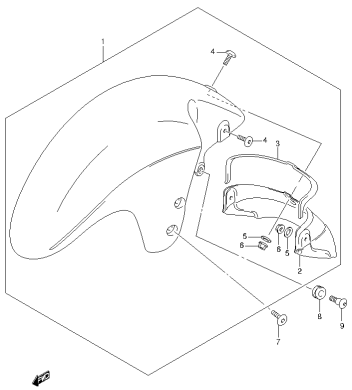

GSX1300RAL4_E99_041
FRONT FENDER

FIG.42

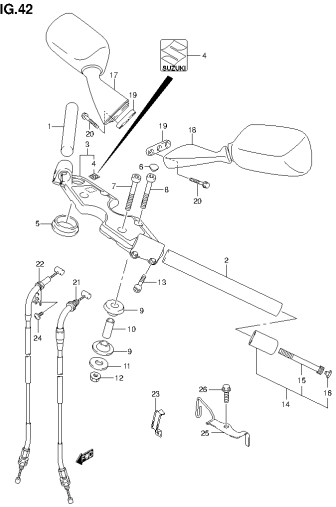

GSX1300RAL4_E99_042
HANDLEBAR

FIG.43

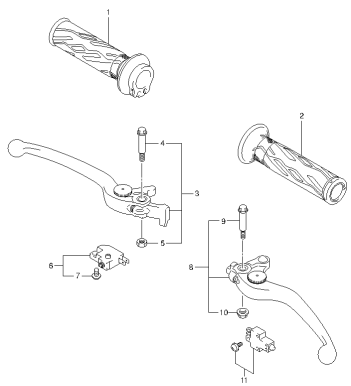

GSX1300RAL4_E99_043
HANDLE LEVER

FIG.44

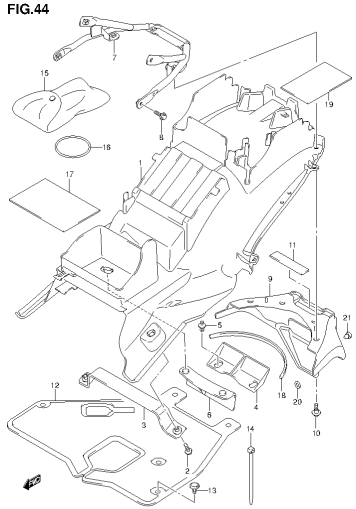

GSX1300RAL4_E99_044
REAR FENDER

FIG.45

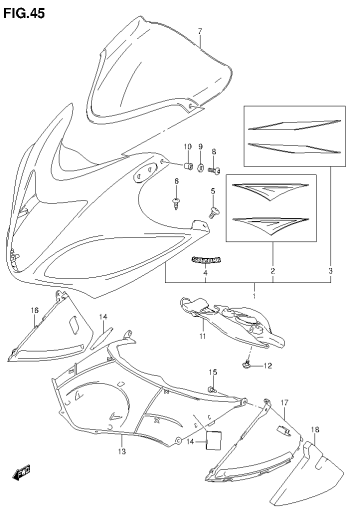

GSX1300RAL4_E99_045
COWLING BODY

FIG.46

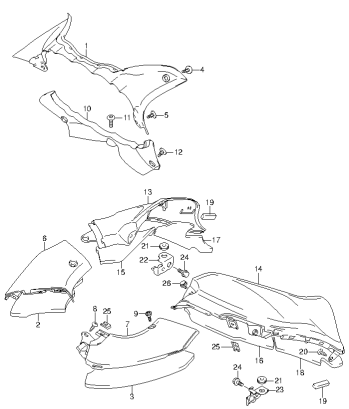

GSX1300RAL4_E99_046
METER PANEL

FIG.47

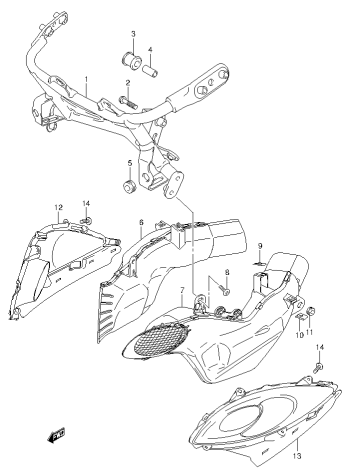

GSX1300RAL4_E99_047
AIR INTAKE PIPE

FIG.48

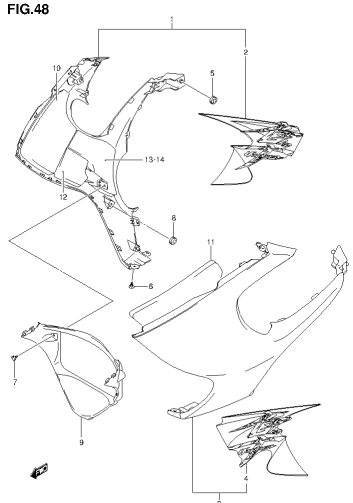

GSX1300RAL4_E99_048
SIDE COWLING

FIG.49

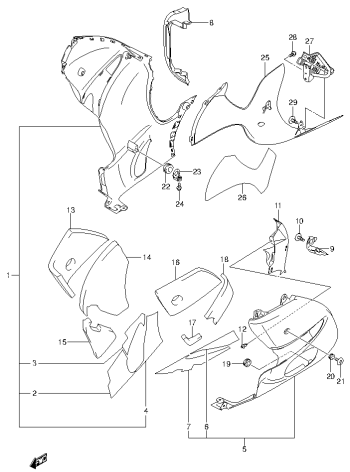

GSX1300RAL4_E99_049
UNDER COWLING

FIG.50

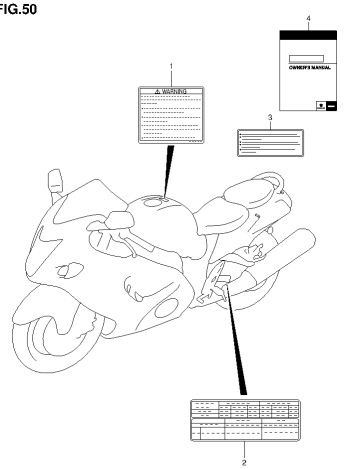

GSX1300RAL4_E99_050
LABEL

FIG.51

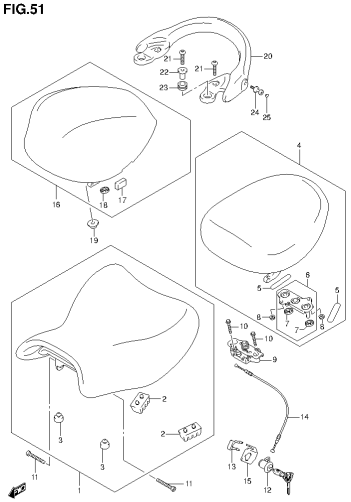

GSX1300RAL4_E99_051
SEAT

FIG.52

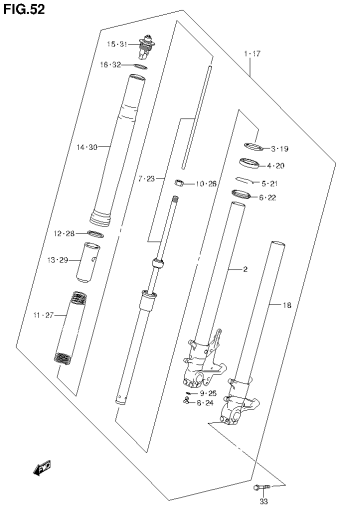

GSX1300RAL4_E99_052
FRONT FORK DAMPER

FIG.53

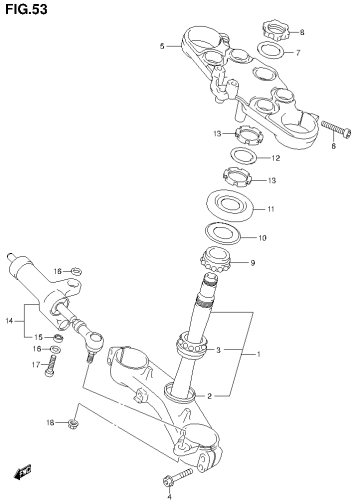

GSX1300RAL4_E99_053
BRACKET STEERING DAMPER

FIG.54

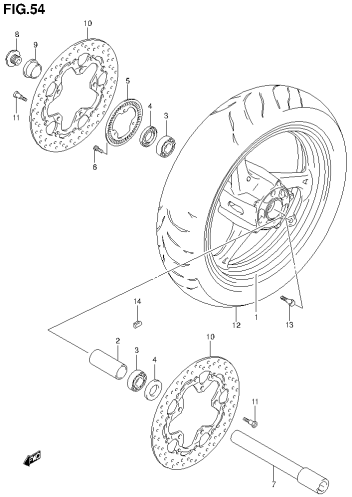

GSX1300RAL4_E99_054
FRONT WHEEL

FIG.55

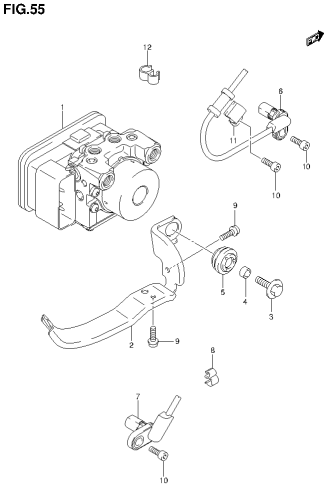

GSX1300RAL4_E99_055
HYDRAULIC UNIT

FIG.56

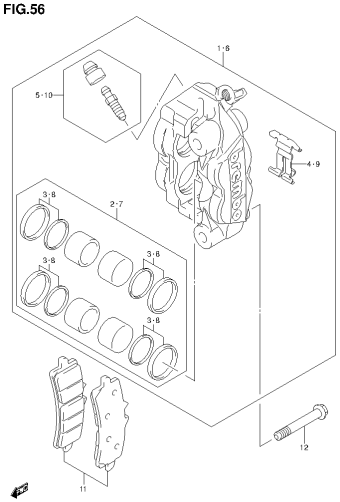

GSX1300RAL4_E99_056
FRONT CALIPER

FIG.57

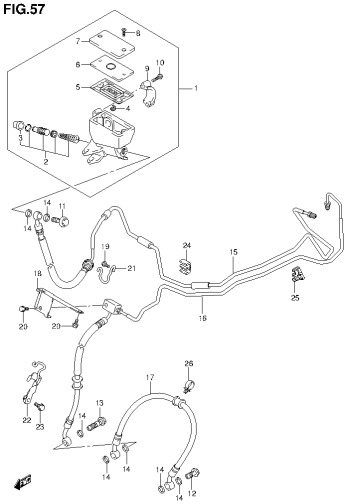

GSX1300RAL4_E99_057
FRONT BRAKE HOSE

FIG.58

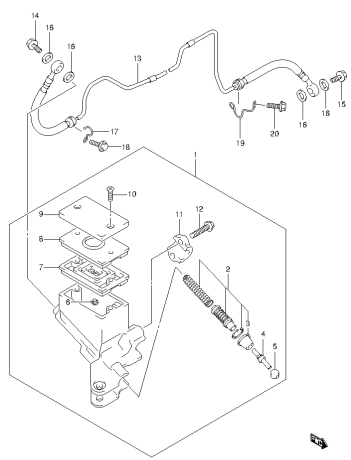

GSX1300RAL4_E99_058
CLUTCH HOSE

FIG.59

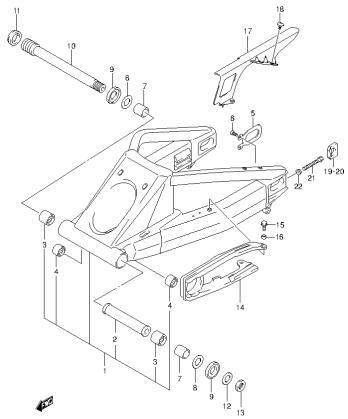

GSX1300RAL4_E99_059
REAR SWINGINGARM

FIG.60

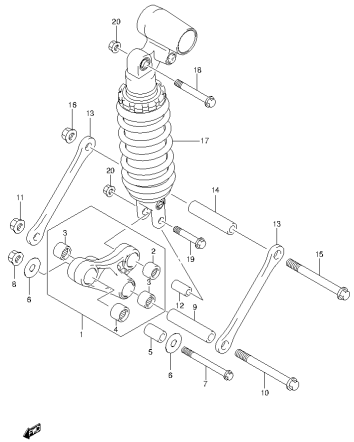

GSX1300RAL4_E99_060
REAR CUSHION LEVER

FIG.61

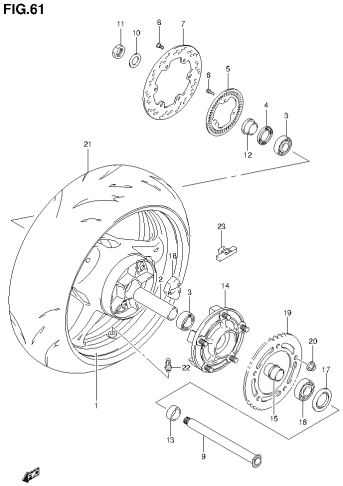

GSX1300RAL4_E99_061
REAR WHEEL

FIG.62

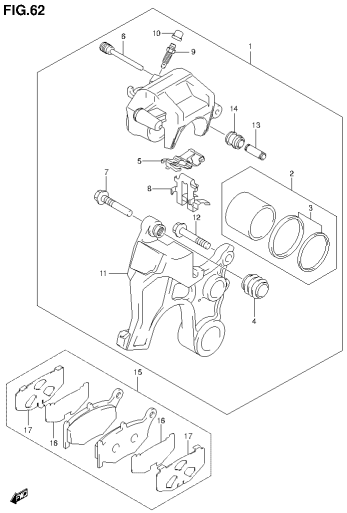

GSX1300RAL4_E99_062
REAR CALIPER

FIG.63

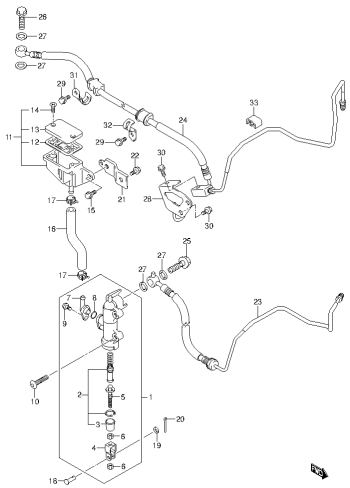

GSX1300RAL4_E99_063
REAR MASTER CYLINDER

FIG.64

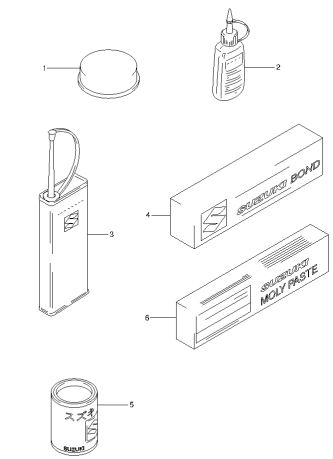

GSX1300RAL4_E99_064
OPTIONAL

FIG.1

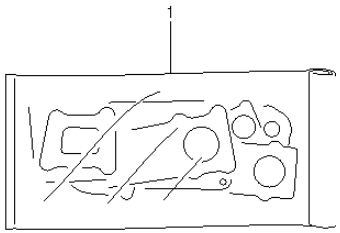

FIG.1 (1-B-2) GASKET SET

REF NO.	PART NO.	DESCRIPTION	Q'TY	REMARKS
1	11400-15881	GASKET SET	1	OPT
2	11141-15H00	.GASKET, CYLINDER HEAD	1	NOT ILLUSTRATED
3	11173-24F00	.GASKET, CYLINDER HEAD COVER NO.1	1	NOT ILLUSTRATED
4	11178-15H00	.GASKET, CYLINDER HEAD COVER NO.2	1	NOT ILLUSTRATED
5	11241-15H00	.GASKET, CYLINDER	1	NOT ILLUSTRATED
6	11482-24F00	.GASKET, CLUTCH COVER (NA)	1	NOT ILLUSTRATED
7	11483-24F00	.GASKET, MAGNETO COVER	1	NOT ILLUSTRATED
8	11485-24F00	.GASKET, GEAR SHIFT COVER (NA)	1	NOT ILLUSTRATED
9	11489-24F10	.GASKET, OIL PAN	1	NOT ILLUSTRATED
10	11491-24F01	.GASKET, STARTER CLUTCH COVER	1	NOT ILLUSTRATED
11	11492-24F00	.GASKET, START IDLE GEAR CAP	1	NOT ILLUSTRATED
12	12837-02H00	.GASKET, TENSIONER ADJUSTER	1	NOT ILLUSTRATED
13	14181-22D01	.GASKET, EXHAUST PIPE	4	NOT ILLUSTRATED
14	11191-27E00	.WASHER	6	NOT ILLUSTRATED

FIG.2

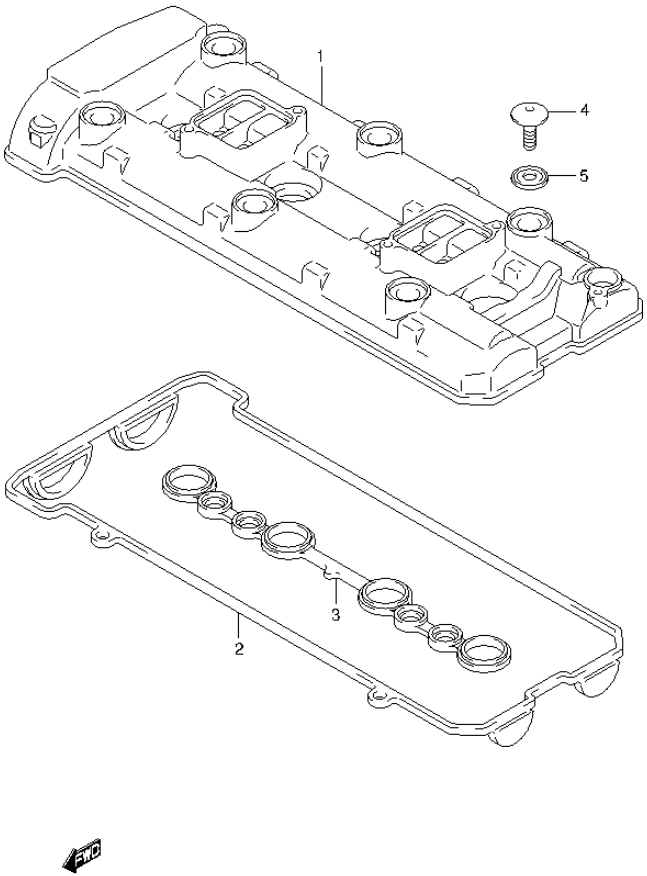

FIG.2 (1-B-3) CYLINDER HEAD COVER

REF NO.	PART NO.	DESCRIPTION	Q'TY	REMARKS
1	11170-15H00	COVER, CYLINDER HEAD	1	
2	11173-24F00	GASKET, HEAD COVER NO.1	1	
3	11178-15H00	GASKET, HEAD COVER NO.2	1	
4	09106-07009	BOLT (7X17.5)	6	
5	11191-27E00	WASHER	6	

FIG.3

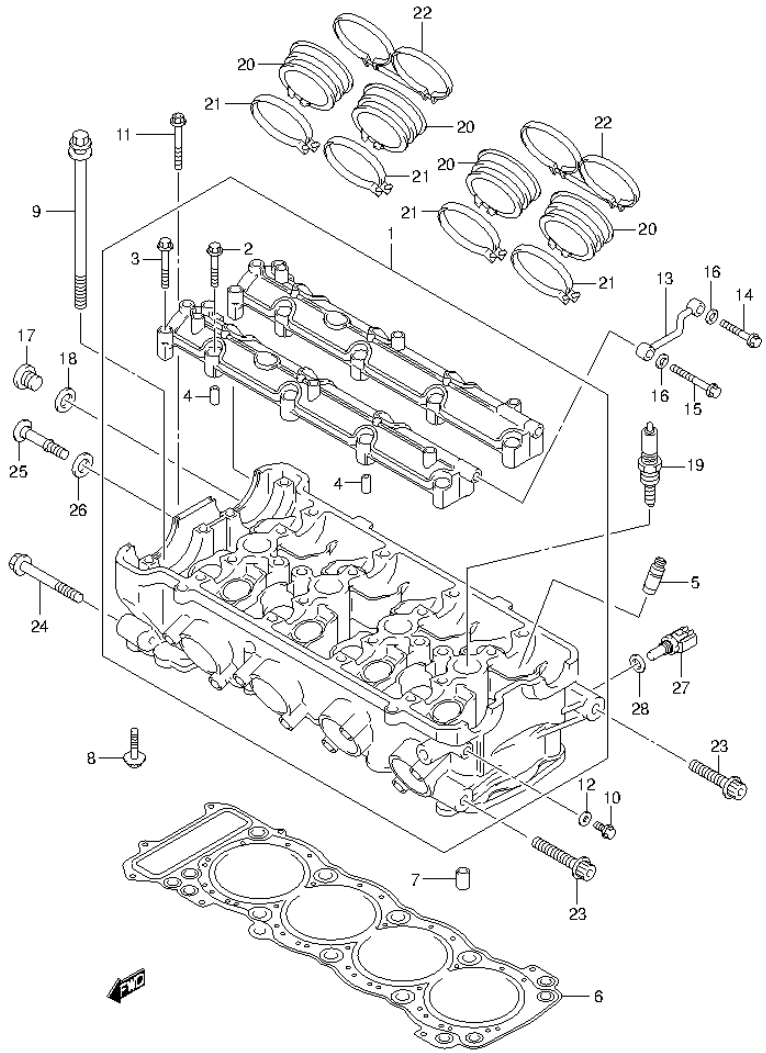

FIG.3 (1-B-4) CYLINDER HEAD

REF NO.	PART NO.	DESCRIPTION	Q'TY	REMARKS
1	11100-15H00	HEAD ASSY, CYLINDER	1	
2	09103-06266	.BOLT (6X40)	16	
3	09103-06293	.BOLT (6X45)	4	
4	09206-08007	.PIN (6.2X8X16)	4	
5	11115-15H70	GUIDE, VALVE (OS:0.3)	16	OPT
6	11141-15H00	GASKET, CYLINDER HEAD	1	
7	04211-11169	PIN	2	
8	01550-0630B	BOLT	1	
9	11117-15H00	BOLT	10	
10	09103-06222	BOLT (6X12)	1	
11	07120-0655B	BOLT	2	
12	09168-06023	GASKET (5.8X13X1.2)	1	
13	11131-33E01	PIPE, OIL	1	
14	01550-0635A	BOLT	1	
15	01550-0645A	BOLT	1	
16	08322-0106A	WASHER	2	
17	09248-16012	PLUG (16X8)	1	
18	09168-16009	GASKET (16X22X0.8)	1	
19-1	09482-00558	SPARK PLUG (NGK,CR9EIA-9)	4	
19-2	09482-00557	SPARK PLUG (DENSO,IU27D)	4	
19-3	09482-00556	SPARK PLUG (NGK,CR8EIA-9)	4	OPT
19-4	09482-00560	SPARK PLUG (NGK,CR10EIA-9)	4	OPT
19-5	09482-00555	SPARK PLUG (DENSO,IU24D)	4	OPT
19-6	09482-00559	SPARK PLUG (DENSO,IU31D)	4	OPT
20	13111-15H00	PIPE, INTAKE	4	
21	09402-60208	CLAMP	4	
22	13170-15H10	CLAMP	2	
23	09106-10069	BOLT (10X45)	2	
24	09106-10084	BOLT (10X60)	2	
25	11161-33E00	BOLT, CYL HEAD SIDE FACE	1	
26	11191-13E00	WASHER	1	
27	13650-49X00	SENSOR, WATER TEMPERATURE	1	
28	09168-12017	GASKET (12X17X1)	1	

FIG.4

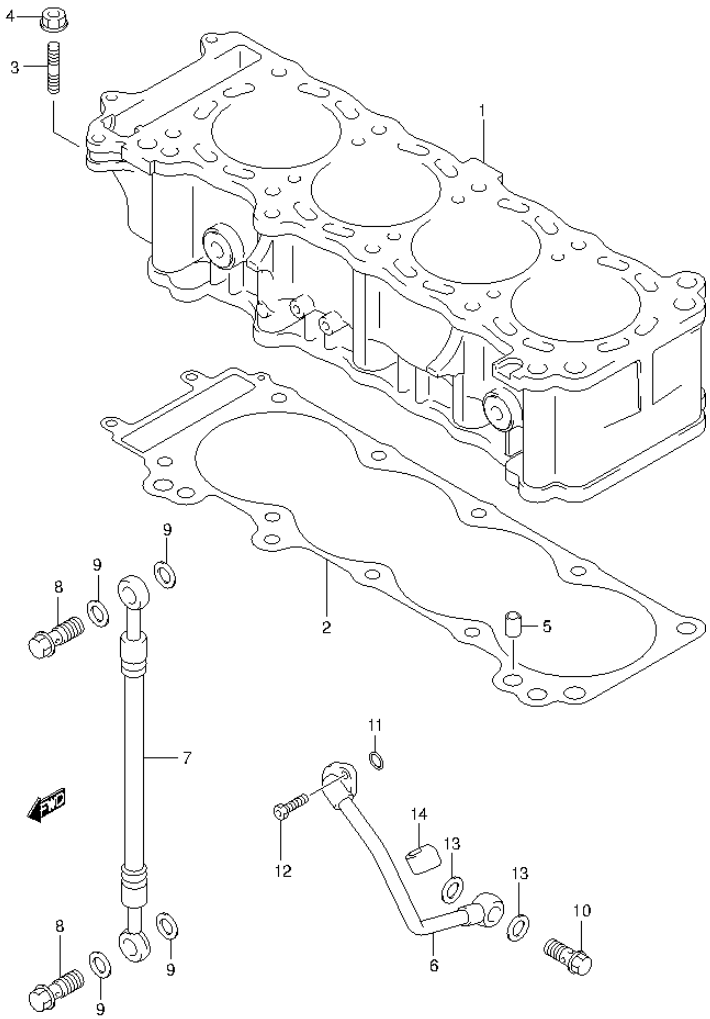

FIG.4 (1-B-5) CYLINDER

REF NO.	PART NO.	DESCRIPTION	Q'TY	REMARKS
1	11210-15H00-0F0	CYLINDER	1	
2	11241-15H00	GASKET	1	
3	01421-0625B	STUD BOLT	2	
4	08316-1006B	NUT	2	
5	04211-11169	PIN	2	
6	11280-24F00	PIPE, CRANKCASE OIL	1	
7	11282-24F00	HOSE, OIL	1	
8	09360-10062	UNION	2	
9	09168-10007	GASKET (10.1X16X1)	4	
10	09360-14012	UNION	1	
11	09280-12012	O RING (D:2.4,ID:11.8)	1	
12	09106-06073	BOLT (6X16)	2	
13	09168-14015	GASKET (14X20X1.5)	2	
14	11283-24F00	CUSHION, CRANKCASE OIL PIPE	1	

FIG.5

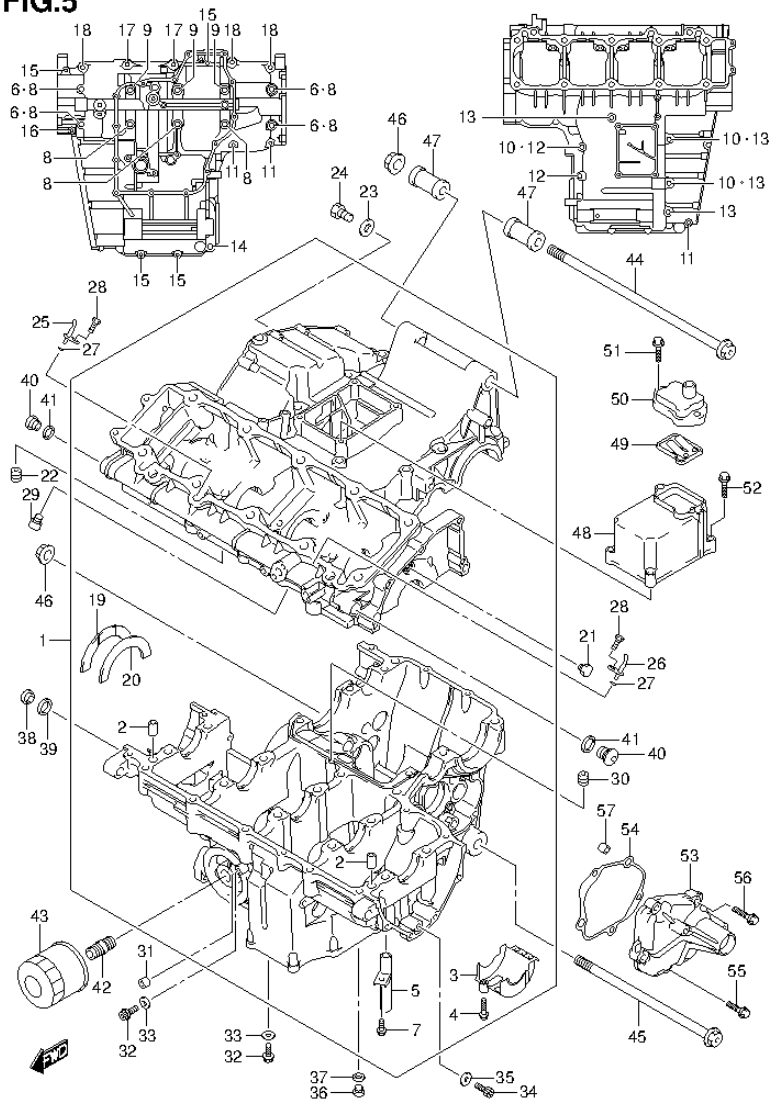

FIG.5 (1-B-6) CRANKCASE

REF NO.	PART NO.	DESCRIPTION	Q'TY	REMARKS
1	11302-24820	CRANKCASE SET	1	
2	11319-33E50	.PIN	4	
3	11323-24F10	.SEPARATOR, OIL	1	
4	01547-0625A	.BOLT	1	
5	11328-24F00	.UNION, BREATHER OIL	1	
6	09168-10031	.GASKET (10.2X20X2.3)	4	
7	01547-0612A	.BOLT	1	
8	09103-09008	.BOLT (9X95)	7	
9	09103-09010	.BOLT (9X115)	3	
10	09168-08016	.GASKET (8.2X14X1)	3	
11	01547-0650A	.BOLT	3	
12	01550-0865A	.BOLT	2	
13	01550-0880A	.BOLT	4	
14	01550-1060A	.BOLT	1	
15	01547-0640A	.BOLT	4	
16	01547-0660A	.BOLT	1	
17	09103-08155	.BOLT (8X60)	2	
18	09103-08355	.BOLT (8X50)	3	
19	12228-24F00-0D0	.BEARING, CRANK THRUST (GREEN)	1	RH
20-1	12228-24F00-0A0	.BEARING, CRANK THRUST (RED)	1	LH
20-2	12228-24F00-0B0	.BEARING, CRANK THRUST (BLACK)	1	
20-3	12228-24F00-0C0	.BEARING, CRANK THRUST (BLUE)	1	
20-4	12228-24F00-0D0	.BEARING, CRANK THRUST (GREEN)	1	
20-5	12228-24F00-0E0	.BEARING, CRANK THRUST (YELLOW)	1	
20-6	12228-24F00-0F0	.BEARING, CRANK THRUST (WHITE)	1	
21	11393-33E01	JET, MAGNETO COOLING	1	
22	09493-20012	JET, AIR (100)	1	
23	09168-06023	GASKET (5.8X13X1.2)	1	
24	07120-0612B	PLUG	1	
25	11390-34E00	JET, PISTON COOLING RH	2	
26	11390-34E10	JET, PISTON COOLING LH	2	
27	09280-04004	O RING (D:1.2,ID:4)	4	
28	09106-06075	BOLT (6X12)	4	
29	09106-06076	BOLT (6X10)	4	

FIG.5

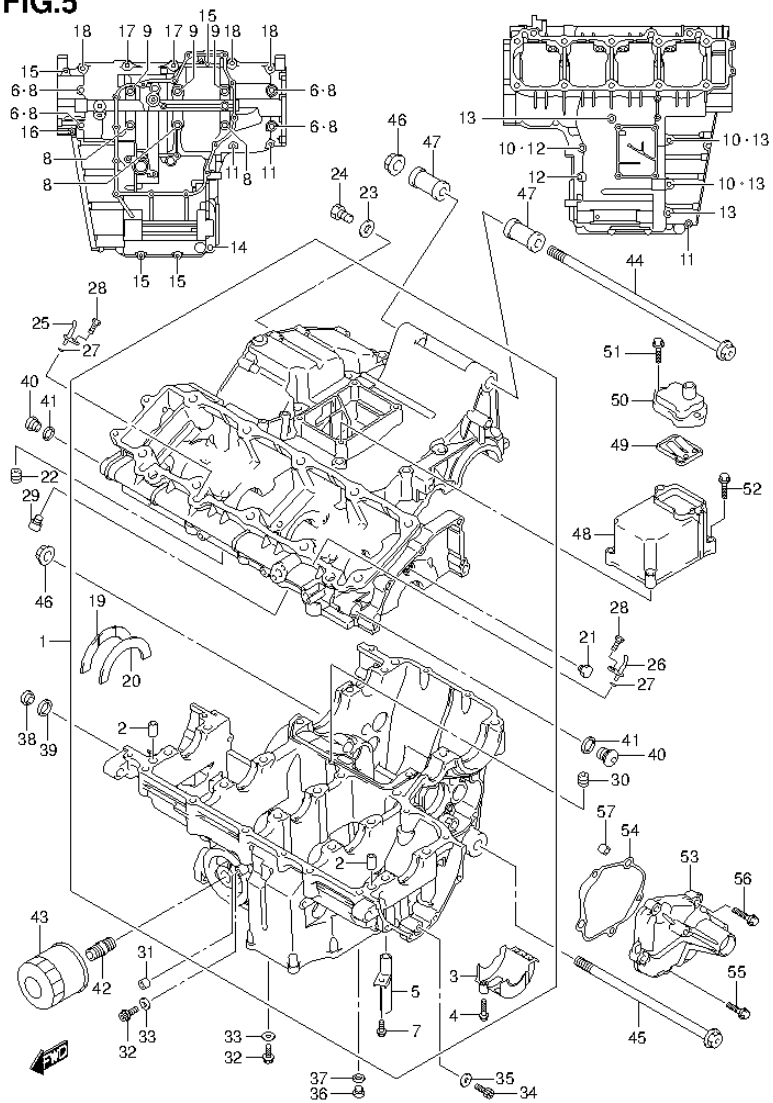

FIG.5 (1-B-7) CRANKCASE

REF NO.	PART NO.	DESCRIPTION	Q'TY	REMARKS
30	09493-36006	JET, AIR (180)	1	
31	11532-46E00	JET, OIL GALLERY	1	
32	07120-0612B	PLUG	2	
33	09168-06023	GASKET (5.8X13X1.2)	2	
34	07130-0816B	PLUG	1	
35	09168-08016	GASKET (8.2X14X1)	1	
36	09248-10010	PLUG (10X10)	1	
37	09168-10002	GASKET (10X14X3.6)	1	
38	09248-16012	PLUG (16X8)	1	
39	09168-16002	GASKET (16X22X2)	1	
40	09248-14012	PLUG (14X12)	2	
41	09168-14002	GASKET (13.8X18.8X4.8)	2	
42	16591-06B01	UNION, OIL FILTER STAND	1	
43	16510-07J00	FILTER ASSY, ENGINE OIL	1	
44	09103-12120	BOLT (12X320)	1	
45	09103-12119	BOLT (12X243)	1	
46	09159-12054	NUT	2	
47	11611-24F00	SPACER, ENGINE MOUNT	2	
48	11331-15H00	COVER, BREATHER	1	
49	13150-01H01	VALVE ASSY, BREATHER REED	1	
50	11372-21H00	COVER, REED VALVE	1	
51	01547-0620A	BOLT	2	
52	01547-0630A	BOLT	4	
53	11383-15H00	COVER, GEAR SHIFT	1	
54	11485-24F00	GASKET	1	
55	01547-0625A	BOLT	3	
56	01547-0635A	BOLT	2	
57	04211-09149	PIN	2	

FIG.6

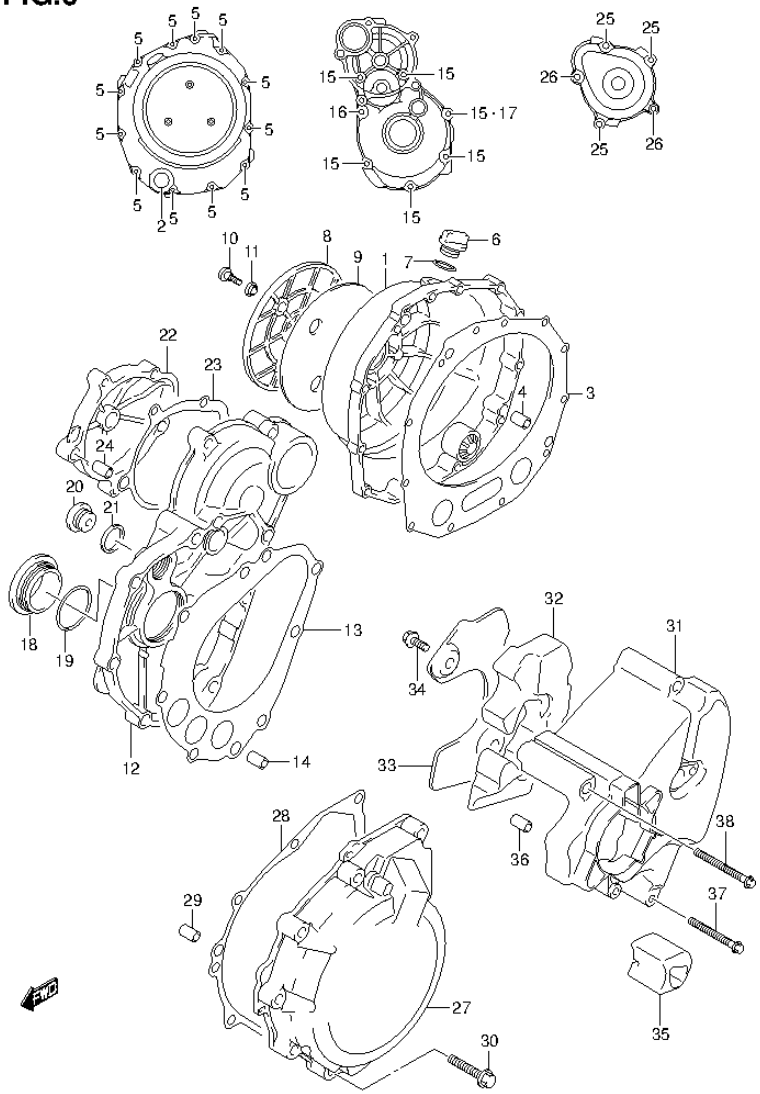

FIG.6 (1-B-8) CRANKCASE COVER

REF NO.	PART NO.	DESCRIPTION	Q'TY	REMARKS
1	11340-24F01	COVER, CLUTCH	1	
2	11971-33210	.LENS, OIL LEVEL	1	
3	11482-24F00	GASKET, CLUTCH COVER	1	
4	04211-09189	PIN	2	
5	09103-06213	BOLT (6X30)	12	
6	11971-25D00	PLUG, ENGINE OIL FILLER	1	
7	09280-17003	O RING (D:3.1,ID:16.8)	1	
8	11371-24F00	COVER, CLUTCH OUTER	1	
9	11372-24F00	CUSHION, CLUTCH OUTER COVER	1	
10	09139-06107	SCREW (6X16)	3	
11	11373-24F00	WASHER, CL OUTER COVER SCREW	3	
12	11380-24F20	COVER, STARTER CLUTCH	1	
13	11491-24F01	GASKET, STARTER CLUTCH COVER	1	
14	04211-09149	PIN	2	
15	09103-06212	BOLT (6X25)	6	
16	09103-06214	BOLT (6X35)	1	
17	09168-06023	GASKET (5.8X13X1.2)	1	
18	09259-36021	PLUG (36X10)	1	
19	09280-33004	O RING (D:3.1,ID:32.7)	1	
20	09248-16012	PLUG (16X8)	1	
21	09168-16002	GASKET (16X22X2)	1	
22	11382-24F20	CAP, STARTER IDLE GEAR	1	
23	11492-24F00	GASKET, STARTER IDLE GEAR CAP	1	
24	04211-09149	PIN	2	
25	09103-06212	BOLT (6X25)	3	
26	09103-06214	BOLT (6X35)	2	
27	11351-24F00	COVER, MAGNETO	1	
28	11483-24F00	GASKET, MAGNETO COVER	1	
29	04211-09149	PIN	2	
30	09103-06213	BOLT (6X30)	9	
31	11361-15H00	COVER, ENGINE SPROCKET	1	
32	11362-15H00	DAMPER, ENGINE SPROCKET COVER	1	
33	11363-15H00	PLATE, ENGINE SPROCKET COVER	1	
34	09103-06172	BOLT (6X12)	2	

FIG.6

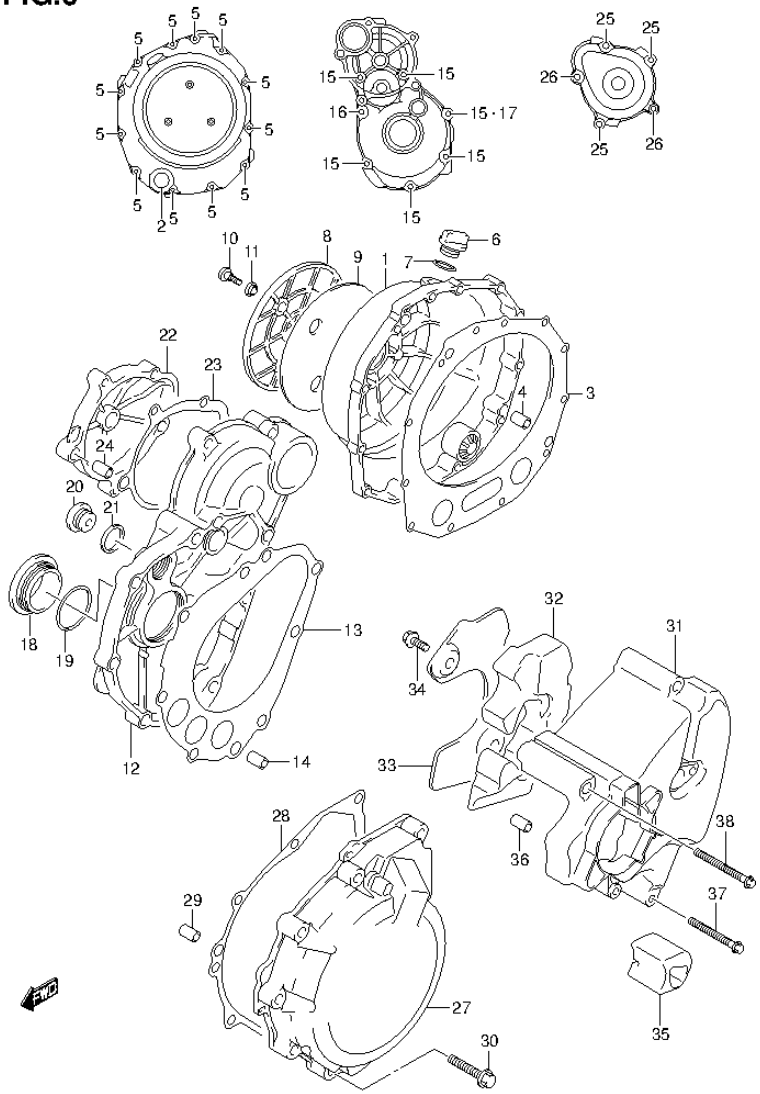

FIG.6 (1-B-9) CRANKCASE COVER

REF NO.	PART NO.	DESCRIPTION	Q'TY	REMARKS
35	11364-15H00	PROTECTOR, ENGINE SPRKT COVER	1	
36	04211-09149	PIN	2	
37	09103-06216	BOLT (6X55)	2	
38	09103-06239	BOLT (6X65)	2	

FIG.7

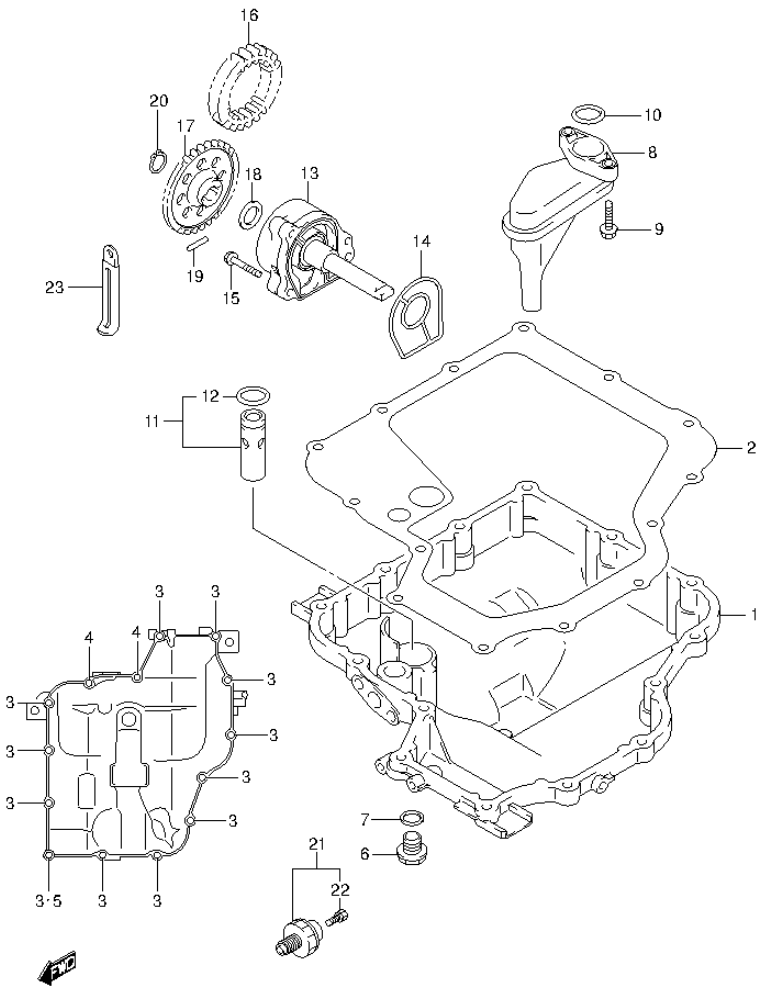

FIG.7 (1-B-10) OIL PAN/OIL PUMP

REF NO.	PART NO.	DESCRIPTION	Q'TY	REMARKS
1	11511-24F10	PAN, OIL	1	
2	11489-24F10	GASKET, OIL PAN	1	
3	01547-0630A	BOLT	12	
4	01547-0640A	BOLT	2	
5	09168-06023	GASKET (5.8X13X1.2)	1	
6	09247-14036	PLUG (14X20)	1	OIL DRAIN
7	09168-14002	GASKET (13.8X18.8X4.8)	1	
8	16520-24F00	STRAINER, ENGINE OIL	1	
9	01550-0620A	BOLT	2	
10	09280-19008	O RING (D:2.62,ID:20.3)	1	
11	16440-24F00	VALVE ASSY, OIL RELIEF	1	
12	09280-13004	.O RING (D:1.9,ID:13)	1	
13	16400-24F01	PUMP ASSY, ENGINE OIL	1	
14	16491-24F00	O RING	1	
15	01547-0630A	BOLT	3	
16	16321-33E10	GEAR, OIL PUMP DRIVE (NT:34)	1	
17	16331-33E00	GEAR, OIL PUMP DRIVEN (NT:37)	1	
18	09181-12158	SHIM (12X20X0.5)	1	
19	09261-05006	PIN (5X18)	1	
20	08331-3112A	CIRCLIP	1	
21	37820-33D10	SWITCH ASSY, OIL PRESSURE	1	
22	37822-33D00	.BOLT	1	
23	09404-06429	CLAMP (L:45)	2	

FIG.8

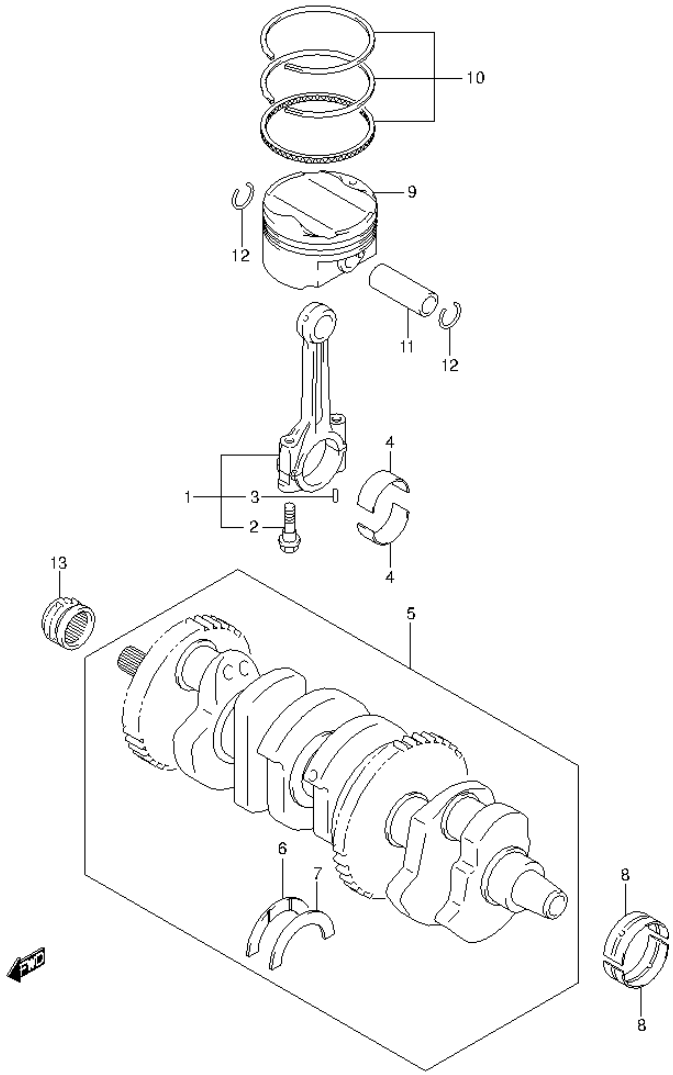

FIG.8 (1-B-11) CRANKSHAFT

REF NO.	PART NO.	DESCRIPTION	Q'TY	REMARKS
1	12160-15H00	ROD ASSY, CONNECTING	4	
2	12163-24F10	.BOLT	8	
3	04221-04089	.PIN	8	
4-1	12164-46E01-0A0	BEARING, CRANK PIN (GREEN)	8	
4-2	12164-46E01-0B0	BEARING, CRANK PIN (BLACK)	8	
4-3	12164-46E01-0C0	BEARING, CRANK PIN (BROWN)	8	
4-4	12164-46E01-0D0	BEARING, CRANK PIN (YELLOW)	8	
5	12000-15810	CRANKSHAFT SET	1	
6	12228-24F00-0D0	.BEARING, THRUST RH (GREEN)	1	
7-1	12228-24F00-0A0	.BEARING, THRUST LH (RED)	1	
7-2	12228-24F00-0B0	.BEARING, THRUST LH (BLACK)	1	
7-3	12228-24F00-0C0	.BEARING, THRUST LH (BLUE)	1	
7-4	12228-24F00-0D0	.BEARING, THRUST LH (GREEN)	1	
7-5	12228-24F00-0E0	.BEARING, THRUST LH (YELLOW)	1	
7-6	12228-24F00-0F0	.BEARING, THRUST LH (WHITE)	1	
8-1	12229-15H00-0A0	BEARING, CRANKSHAFT (GREEN)	10	
8-2	12229-15H00-0B0	BEARING, CRANKSHAFT (BLACK)	10	
8-3	12229-15H00-0C0	BEARING, CRANKSHAFT (BROWN)	10	
8-4	12229-15H00-0D0	BEARING, CRANKSHAFT (YELLOW)	10	
8-5	12229-15H00-0E0	BEARING, CRANKSHAFT (BLUE)	10	
9	12111-15H00-0F0	PISTON	4	
10	12140-15H10	RING SET, PISTON	4	
11	12151-07D00	PIN, PISTON	4	
12	09381-18003	CIRCLIP	8	
13	12731-24F10	SPROCKET, CAM CHAIN	1	

FIG.9

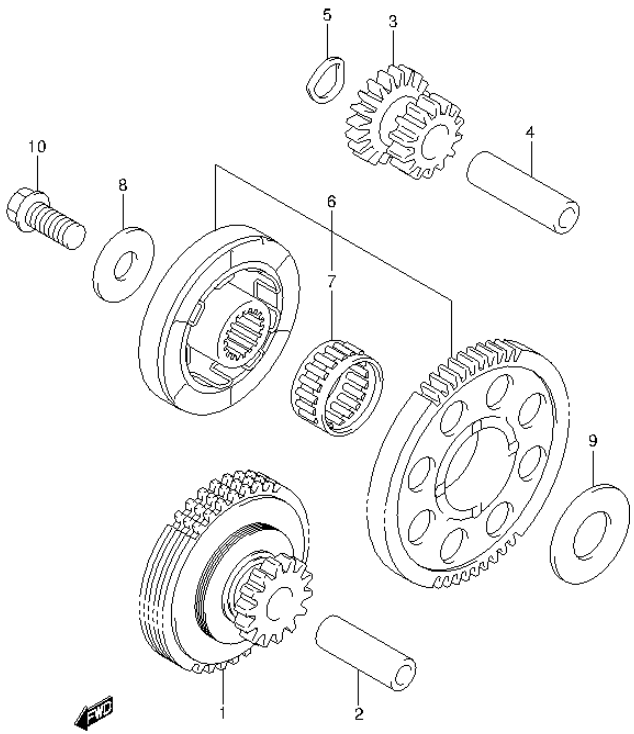

FIG.9 (1-B-12) STARTER CLUTCH

REF NO.	PART NO.	DESCRIPTION	Q'TY	REMARKS
1	12600-24F00	LIMITER ASSY, STARTER IDLE GEAR NO.1	1	
2	12615-24F00	PIN, STARTER IDLE GEAR NO.1	1	
3	12612-24F00	GEAR, STARTER IDLE NO.2 (NT:14/17)	1	
4	12151-05200	PIN	1	
5	09164-14008	WASHER	1	
6	12600-24861	CLUTCH, STARTER ONE WAY	1	
7	09263-28031	.BEARING (28X34X16.8)	1	
8	08211-10285	WASHER	1	
9	08211-20403	WASHER	1	
10	09103-10189	BOLT (10X23)	1	

FIG.10

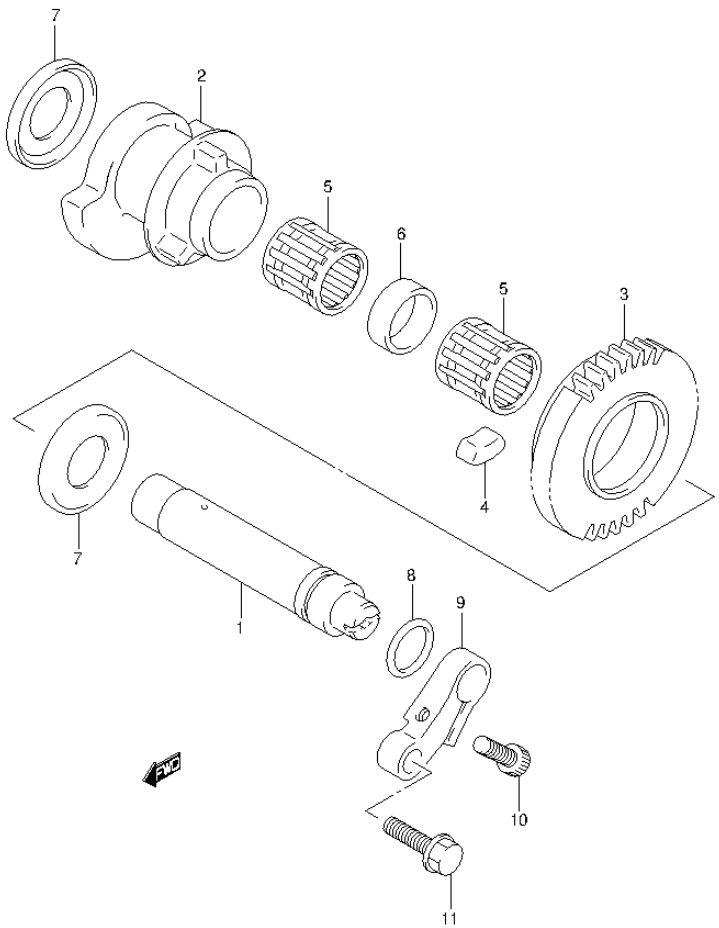

FIG.10 (1-B-13) CRANK BALANCER

REF NO.	PART NO.	DESCRIPTION	Q'TY	REMARKS
1	12650-24F01-0F0	SHAFT, CRANK BALANCER	1	
2	12654-24F00-0F0	BALANCER, CRANK	1	
3	12666-24F00	GEAR, CRANK BALANCER (NT:32)	1	
4	12686-24F00	DAMPER, BALANCER GEAR	6	
5	09263-19015	BEARING (19X26X25.2)	2	
6	09180-19014	SPACER (19X26X8.6)	1	
7	09169-21001	WASHER	2	
8	09280-17007	O RING (D:1.9,ID:16.8)	1	LH
9	12681-26D01	ARM, BALANCER SHAFT	1	
10	07130-0620A	BOLT	1	
11	09103-06286	BOLT (6X20)	1	

FIG.11

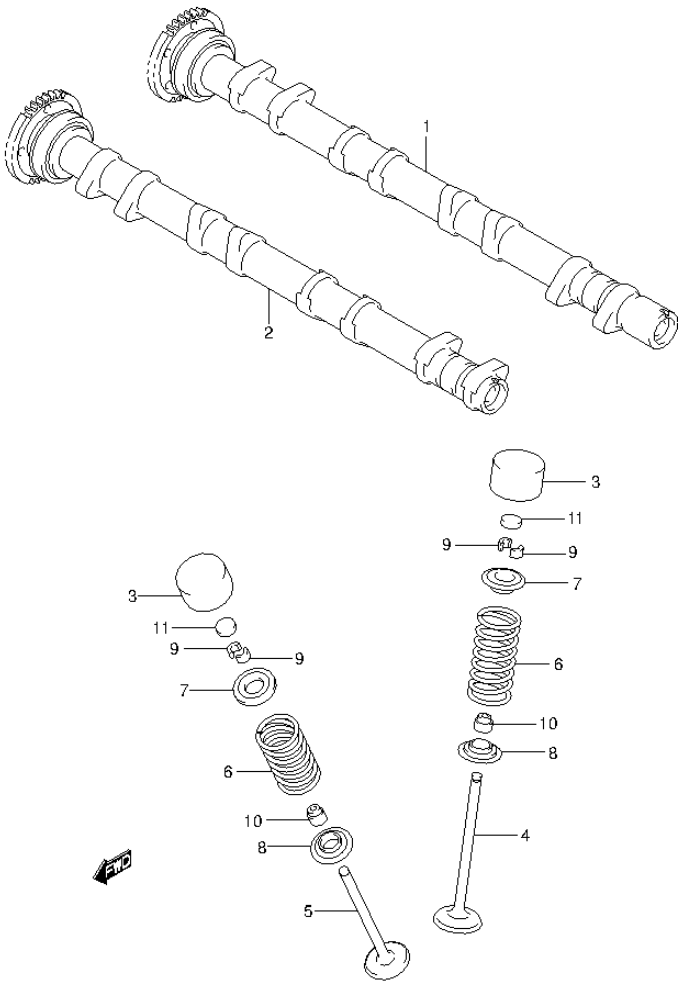

FIG.11 (1-B-14) CAMSHAFT/VALVE

REF NO.	PART NO.	DESCRIPTION	Q'TY	REMARKS
1	12710-15H00	CAMSHAFT, INTAKE	1	
2	12720-15H00	CAMSHAFT, EXHAUST	1	
3	12891-02F00	TAPPET	16	
4	12911-15H00	VALVE, INTAKE	8	
5	12912-15H00	VALVE, EXHAUST	8	
6	12921-15H00	SPRING, VALVE	16	
7	12931-02F10	RETAINER, VALVE SPRING	16	
8	12933-38400	SEAT, VALVE SPRING	16	
9	12932-24F00	COTTER, VALVE	32	
10	09289-05011	OIL SEAL (5X10X9.7)	16	
11-1	12892-41C00-230	SHIM, TAPPET (T:2.30)	16	
11-2	12892-41C00-235	SHIM, TAPPET (T:2.35)	16	
11-3	12892-41C00-240	SHIM, TAPPET (T:2.40)	16	
11-4	12892-41C00-245	SHIM, TAPPET (T:2.45)	16	
11-5	12892-41C00-250	SHIM, TAPPET (T:2.50)	16	
11-6	12892-41C00-255	SHIM, TAPPET (T:2.55)	16	
11-7	12892-41C00-260	SHIM, TAPPET (T:2.60)	16	
11-8	12892-41C00-265	SHIM, TAPPET (T:2.65)	16	
11-9	12892-41C00-270	SHIM, TAPPET (T:2.70)	16	
11-10	12892-41C00-275	SHIM, TAPPET (T:2.75)	16	
11-11	12892-41C00-280	SHIM, TAPPET (T:2.80)	16	
11-12	12892-41C00-285	SHIM, TAPPET (T:2.85)	16	
11-13	12892-41C00-290	SHIM, TAPPET (T:2.90)	16	
11-14	12892-41C00-295	SHIM, TAPPET (T:2.95)	16	
11-15	12892-41C00-300	SHIM, TAPPET (T:3.00)	16	
11-16	12892-41C00-305	SHIM, TAPPET (T:3.05)	16	
11-17	12892-41C00-310	SHIM, TAPPET (T:3.10)	16	
11-18	12892-41C00-315	SHIM, TAPPET (T:3.15)	16	
11-19	12892-41C00-320	SHIM, TAPPET (T:3.20)	16	
11-20	12892-41C00-325	SHIM, TAPPET (T:3.25)	16	
11-21	12892-41C00-330	SHIM, TAPPET (T:3.30)	16	
11-22	12892-41C00-335	SHIM, TAPPET (T:3.35)	16	
11-23	12892-41C00-340	SHIM, TAPPET (T:3.40)	16	

FIG.11

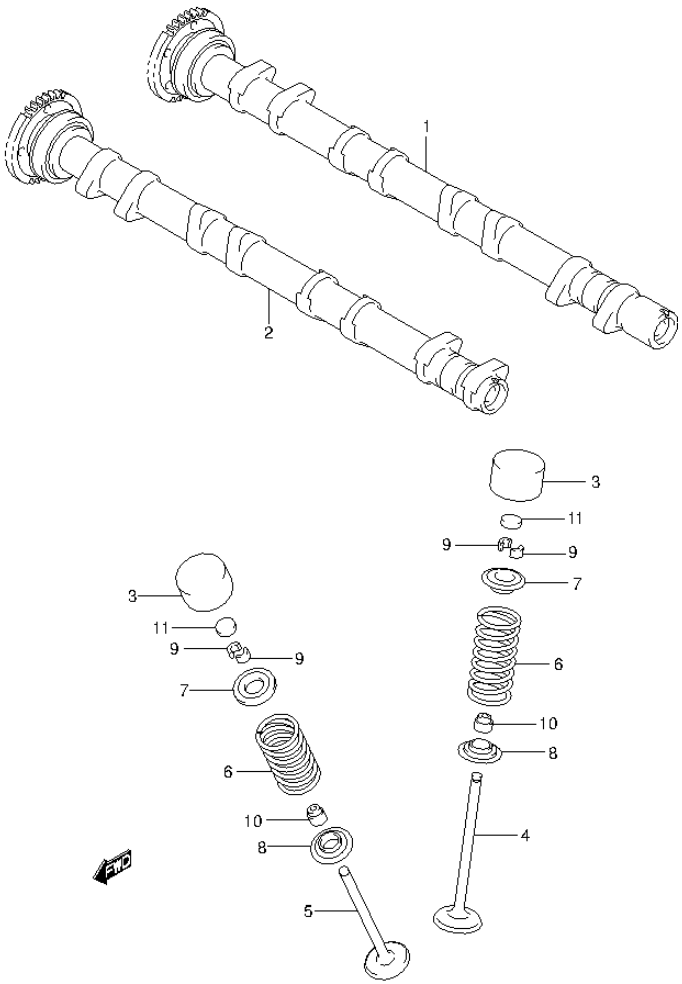

FIG.11 (1-B-15) CAMSHAFT/VALVE

REF NO.	PART NO.	DESCRIPTION	Q'TY	REMARKS
11-24	12892-41C00-345	SHIM, TAPPET (T:3.45)	16	
11-25	12892-41C00-350	SHIM, TAPPET (T:3.50)	16	
12	12800-41810	SHIM SET, TAPPET	1	OPT
		T:250, 255...3.45, 3.50		NOT ILLUSTRATED
		(5PCS.EACH) & CASE		
13	99000-69471	.CASE, TAPPET SHIM	1	OPT
				NOT ILLUSTRATED

FIG.12

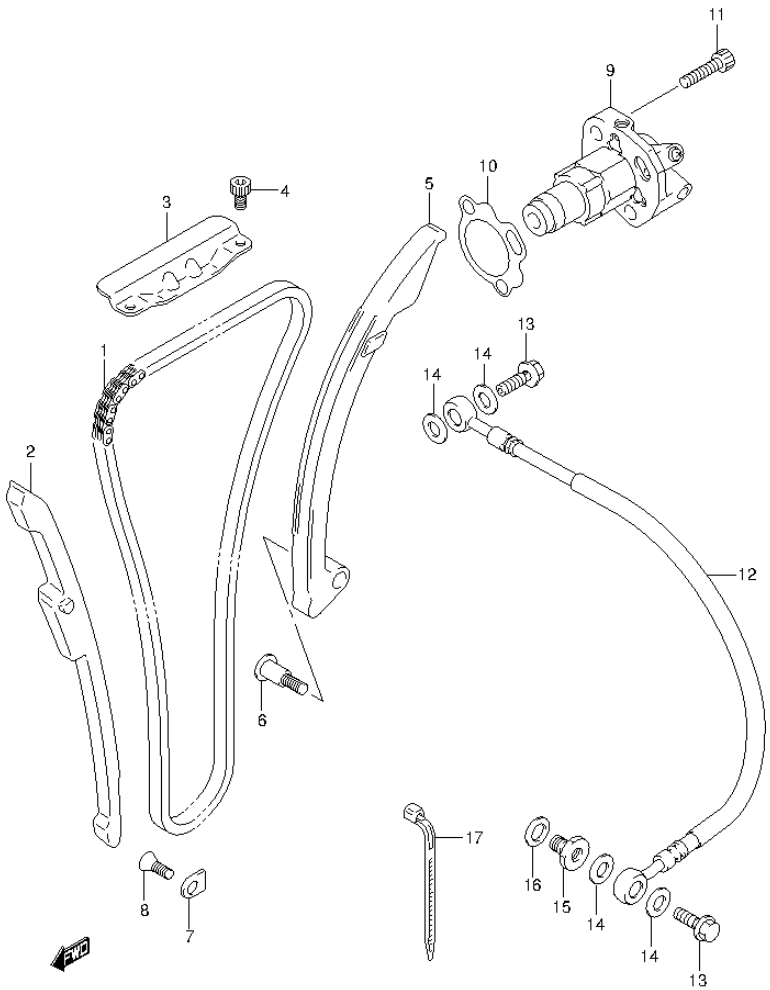

FIG.12 (1-C-2) CAM CHAIN

REF NO.	PART NO.	DESCRIPTION	Q'TY	REMARKS
1	12760-24F01	CHAIN, CAM SHAFT DRIVE (128LE)	1	
2	12771-15H00	GUIDE, CAM CHAIN NO.1	1	
3	12782-24F01	GUIDE, CAM CHAIN NO.2	1	
4	07130-0612A	SCREW	2	
5	12811-15H00	TENSIONER, CAM CHAIN	1	
6	12812-31G00	BOLT	1	
7	12773-24F00	RETAINER, CAM CHAIN GUIDE NO.1	1	
8	02122-0612A	SCREW	1	
9	12830-15H00	ADJUSTER ASSY, TENSIONER	1	
10	12837-02H00	GASKET, TENSIONER ADJUSTER	1	
11	07130-0625A	BOLT	2	
12	12835-15H00	HOSE, CAM CHAIN TENSIONER	1	
13	12838-15H00	BOLT	2	
14	09168-08034	GASKET (7.8X13.5X1.2)	4	
15	12839-15H00	PLUG	1	
16	09168-14002	GASKET (13.8X18.8X4.8)	1	
17	09407-18402	CLAMP (L:165)	1	

FIG.13

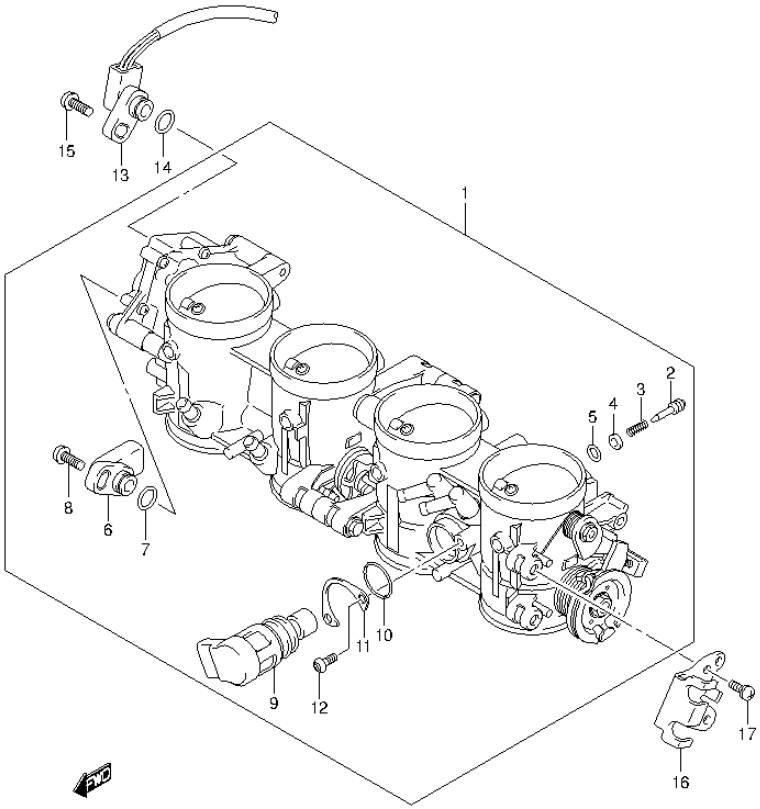

FIG.13 (1-C-3) THROTTLE BODY

REF NO.	PART NO.	DESCRIPTION	Q'TY	REMARKS
1	13406-15H20	THROTTLE BODY	1	
2	13269-18G00	.SCREW, AIR ADJUST	4	
3	13271-43E00	.SPRING, AIR SCREW	4	
4	13291-26E00	.WASHER	4	
5	13295-26E00	.O RING	4	
6	13580-18G00	.SENSOR ASSY, THROTTLE MAIN	1	
7	13575-40F00	.O RING	1	
8	13605-40F00	.SCREW	1	
9	18117-15H11	.VALVE ASSY, ISC	1	
10	18119-05H00	.O RING	1	
11	13428-15H00	.PLATE, ISC VALVE	1	
12	13605-15H00	.SCREW	2	
13	13580-40F31	SENSOR ASSY, THROTTLE SUB	1	
14	13575-40F00	O RING	1	
15	13605-40F00	SCREW	1	
16	13565-15H00	PLATE, STAY	1	
17	13601-21H00	SCREW	2	

FIG.14

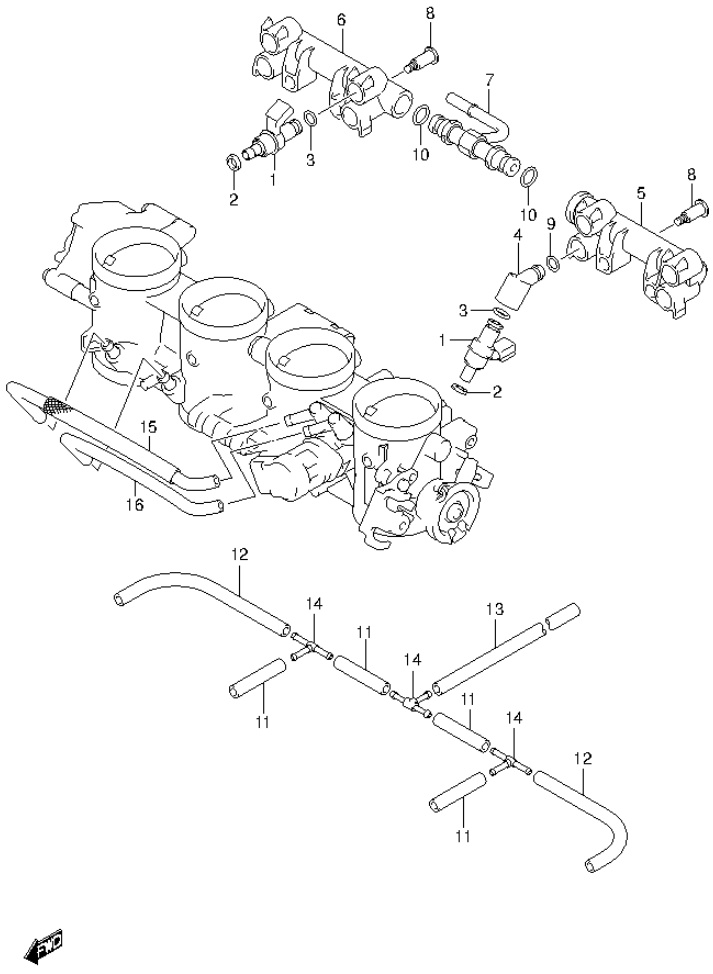

FIG.14 (1-C-4) THROTTLE BODY HOSE/JOINT (GSX1300RAL4 E99)

REF NO.	PART NO.	DESCRIPTION	Q'TY	REMARKS
1	15710-21H10	INJECTOR ASSY	8	
2	15722-21H00	O RING	8	
3	15721-21H00	O RING	8	
4	13473-21H00	PIPE, FUEL	4	
5	13474-21H00	PIPE, FUEL	1	
6	13474-21H10	PIPE, FUEL	1	
7	13473-15H10	JOINT	1	
8	13601-35F00	SCREW	4	
9	15721-24F00	O RING	4	
10	15721-10G00	O RING	2	
11	13697-24F00	HOSE, RUBBER (L:35)	4	
12	13697-24F20	HOSE, RUBBER (L:100)	2	
13	13697-35F00	HOSE, RUBBER (L:170)	1	
14	13471-24F30	T JOINT	3	
15	13680-21H10	TUBE	1	
16	13698-21H00	TUBE	1	

FIG.15

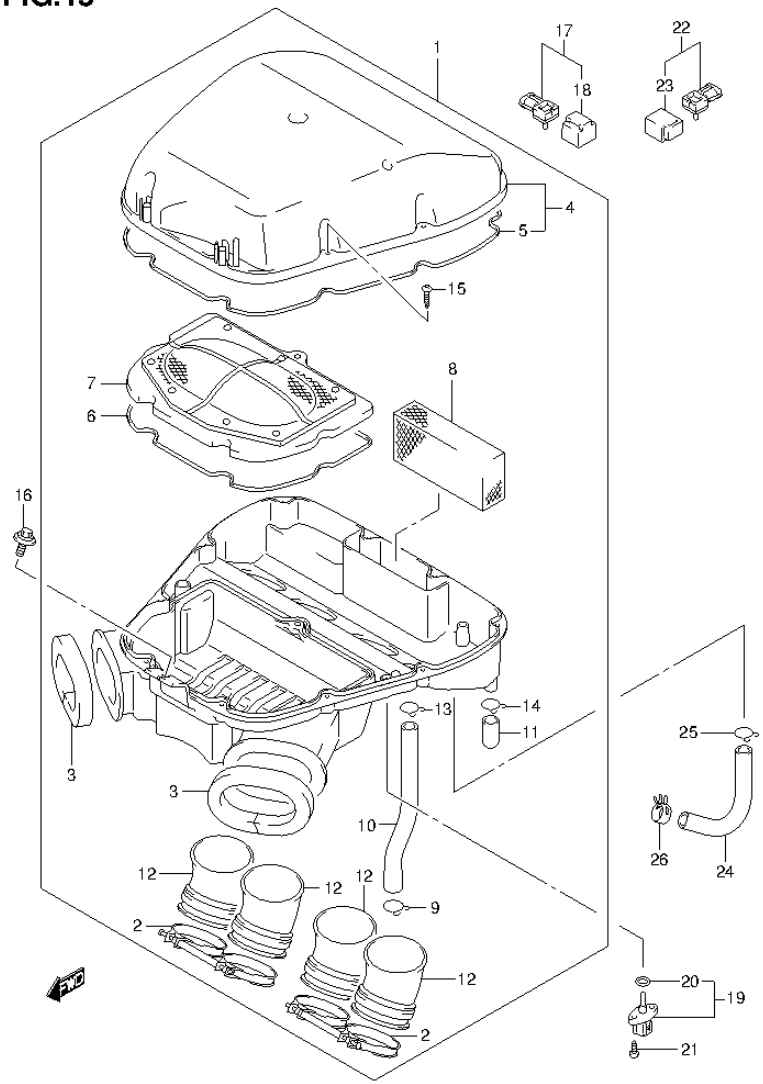

FIG.15 (1-C-5) AIR CLEANER

REF NO.	PART NO.	DESCRIPTION	Q'TY	REMARKS
1	13700-15H02	CLEANER ASSY, AIR	1	
2	13170-15H10	.CLAMP	2	
3	13736-15H01	.CUSHION, DUCT	2	
4	13740-15H00	.CAP, AIR CLEANER	1	
5	13746-15H00	..GASKET, CAP	1	
6	13756-15H00	.GASKET, CASE	1	
7	13780-15H00	.FILTER ASSY	1	
8	13788-15H00	.FILTER, BREATHER	1	
9	09401-16401	.CLIP	1	
10	13853-15H00	.TUBE, BREATHER	1	
11	13859-41B10	.PLUG	1	
12	13882-41G00	.TUBE, OUTLET	4	
13	09401-14101	.CLIP	1	
14	09401-14101	.CLIP	1	
15	03541-0525A	.SCREW	11	
16	09116-06130	BOLT (6X16)	1	
17	15630-29G40	SENSOR, BOOST	1	
18	15625-29G40	.COVER	1	
19	13650-14G10	SENSOR, AIR TEMPERATURE	1	
20	13655-14G10	.O RING	1	
21	03511-0516A	SCREW	2	
22	15630-29G30	SENSOR, AIR PRESSURE	1	
23	15625-29G30	.COVER	1	
24	13697-15H00	HOSE, ISC VALVE	1	
25	09401-15101	CLIP	1	
26	09401-16403	CLIP	1	

FIG.16

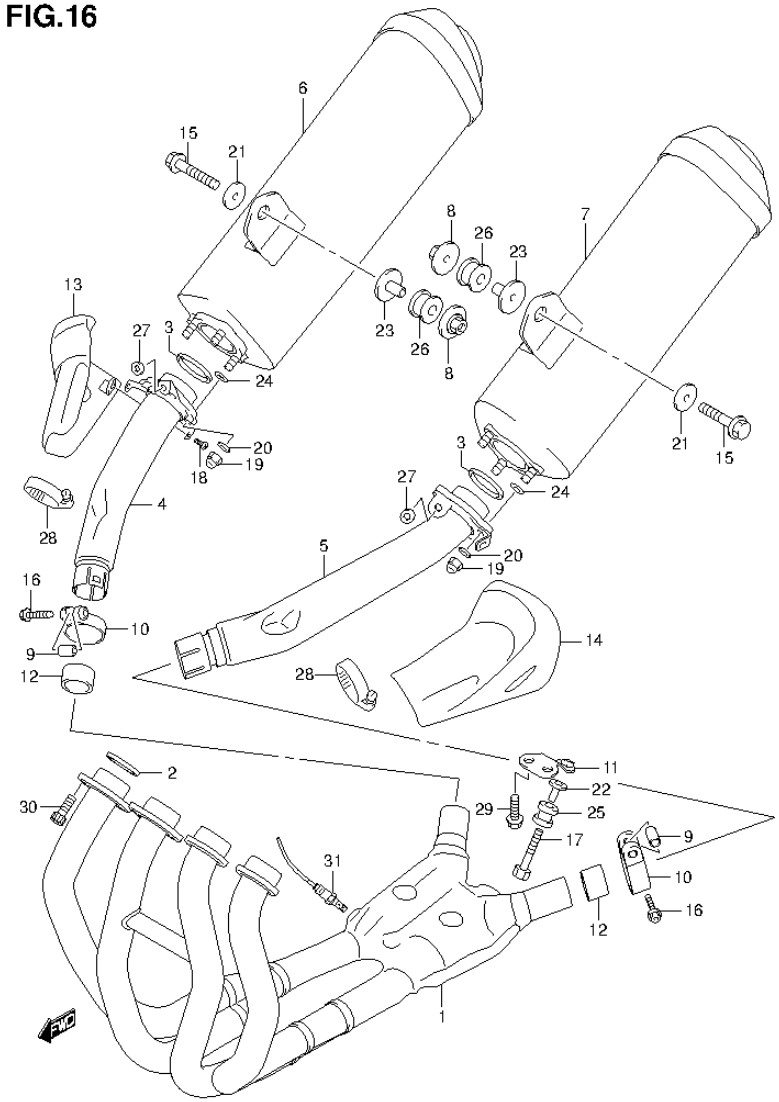

FIG.16 (1-C-6) MUFFLER (GSX1300RAL4 E99)

REF NO.	PART NO.	DESCRIPTION	Q'TY	REMARKS
1	14100-15H02	PIPE, EXHAUST	1	
2	14181-22D01	GASKET	4	
3	14181-33E00	GASKET, JOINT	2	
4	14230-15H00	PIPE, JOINT RH	1	
5	14240-15H00	PIPE, JOINT LH	1	
6	14310-15H03-H01	BODY, MUFFLER RH	1	
7	14340-15H03-H01	BODY, MUFFLER LH	1	
8	14414-15H00	NUT	2	
9	14458-45G10	SPACER	2	
10	14459-15H00	CLAMP	2	
11	14770-15H00	BRACKET	1	
12	14771-15H00	CONNECTOR	2	
13	14780-15H00	COVER, FRONT RH	1	
14	14790-15H00	COVER, FRONT LH	1	
15	09103-08358	BOLT (8X45)	2	
16	09103-08392	BOLT (8X40)	2	
17	09118-08152-A05	BOLT (8X45)	1	
18	09139-06027	SCREW (6X12)	2	
19	09159-08116	NUT	6	
20	09160-08059	WASHER (8.5X18X1.6)	6	
21	09160-08142	WASHER (8.5X28X1.5)	2	
22	09180-08152	SPACER (8.6X12X24.2)	1	
23	09180-08216	SPACER (8.6X12X25)	2	
24	09280-08012	O RING (D:1.9,ID:7.8)	6	
25	09320-12048	CUSHION	1	
26	09320-12049	CUSHION	2	
27	09321-10018	CUSHION	4	
28	09402-70503	CLAMP	2	
29	01550-0820A	BOLT	2	
30	07130-0825A	BOLT	8	
31	18213-15H10	SENSOR, OXYGEN	1	

FIG.17

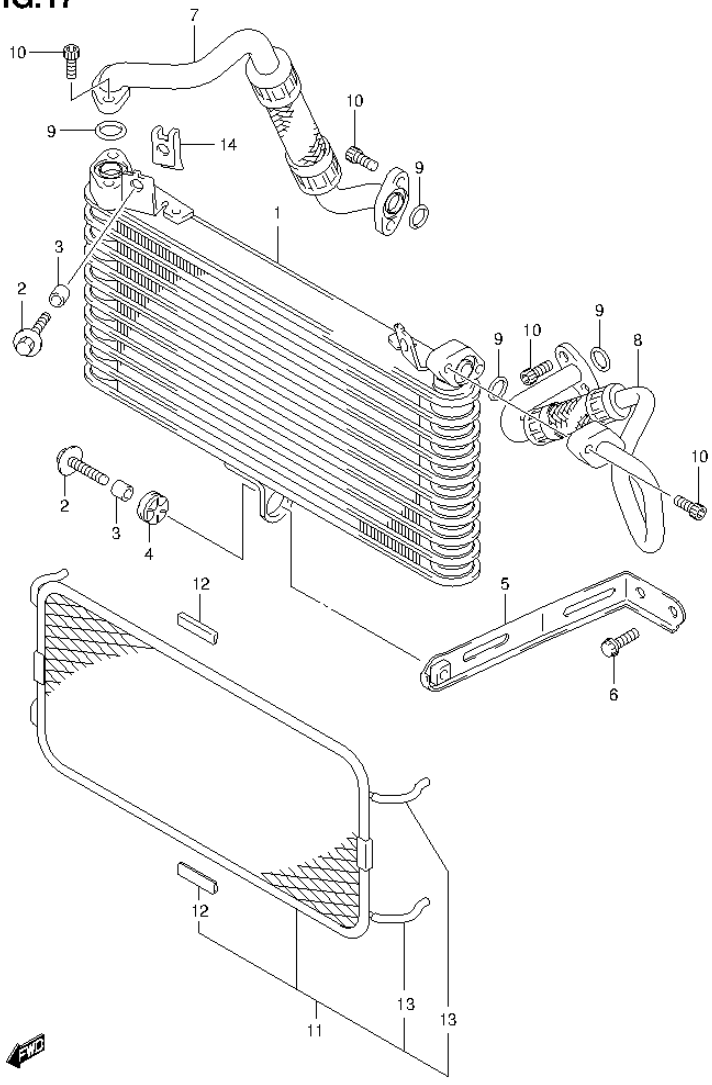

FIG.17 (1-C-7) OIL COOLER

REF NO.	PART NO.	DESCRIPTION	Q'TY	REMARKS
1	16600-15H20	COOLER ASSY, OIL	1	
2	09118-06097	BOLT (6X25)	3	
3	09180-06290	SPACER (6.5X10X12)	3	
4	09320-10051	CUSHION	1	
5	16640-24F00	BRACKET, OIL COOLER	1	
6	01550-0612A	BOLT	2	
7	16460-15H00	HOSE, OIL COOLER RH	1	
8	16470-15H00	HOSE, OIL COOLER LH	1	
9	09280-15015	O RING (D:2.4,ID:16)	4	
10	09106-06073	BOLT (6X16)	8	
11	16650-15H00	GUARD, OIL COOLER	1	
12	17765-09F00	.PROTECTOR, CTR	2	
13	09352-30503-600	.HOSE (3X5X600)	4	L:600->40
14	17802-14F00	NUT	2	

FIG.18

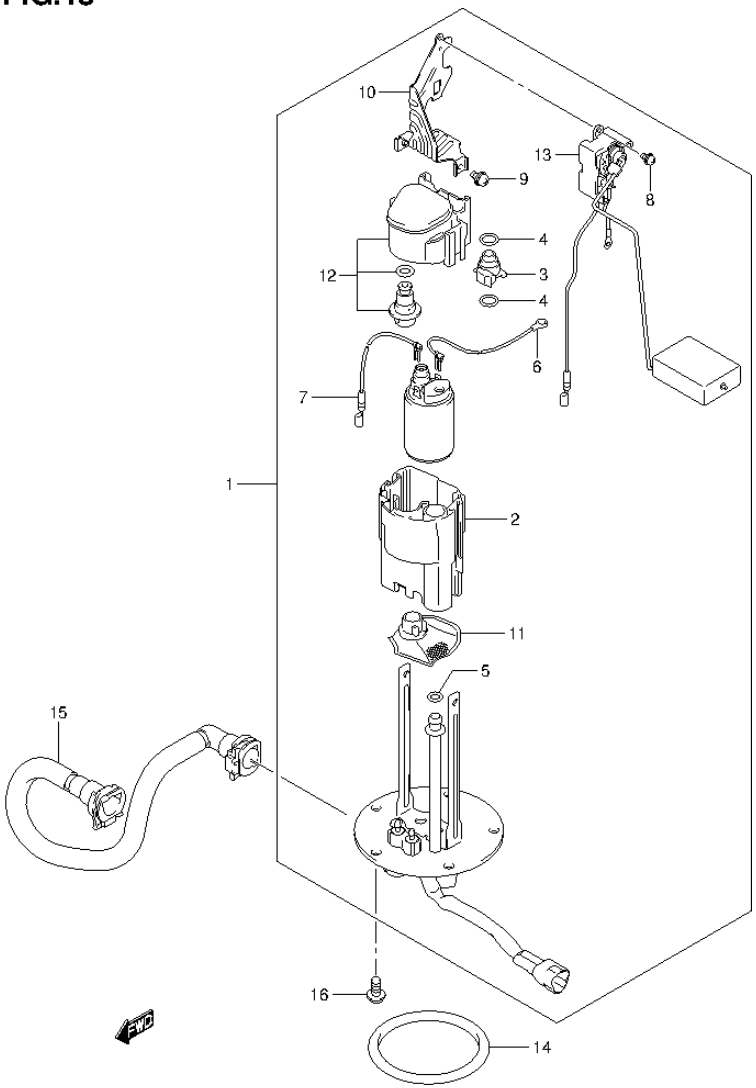

FIG.18 (1-C-8) FUEL PUMP

REF NO.	PART NO.	DESCRIPTION	Q'TY	REMARKS
1	15100-15H10	PUMP ASSY, FUEL	1	
2	15111-27G00	.CUP, RESERVOIR	1	
3	15112-05H00	.JOINT	1	
4	15113-05H00	.O RING	2	
5	15113-35F00	.O RING	1	
6	15114-14J00	.WIRE, EARTH	1	
7	15115-08J00	.WIRE, LEAD	1	
8	15116-10F00	.SCREW	1	
9	15116-10F00	.SCREW	3	
10	15181-15H10	.BRACKET, GAUGE	1	
11	15420-05H00	.STRAINER	1	
12	15610-14J00	.REGULATOR	1	
13	34810-15H10	.GAUGE ASSY, FUEL LEVEL	1	
14	15201-35F00	O RING	1	
15	15810-15H10	HOSE, FUEL	1	
16	07120-0612A	BOLT	5	

GSX1300RAL4_E99_018
FUEL PUMP

FIG.19

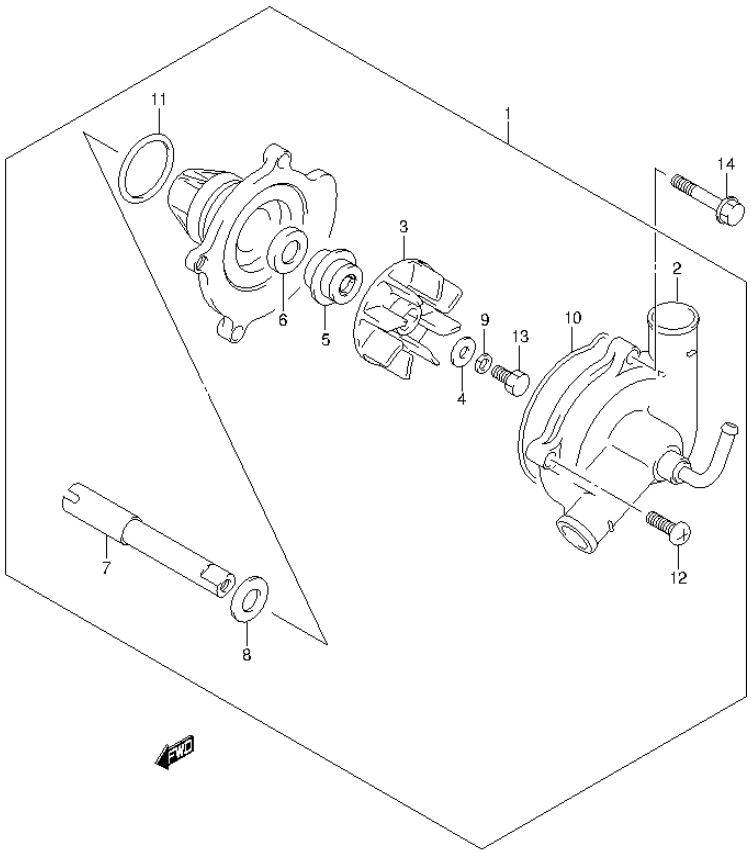

FIG.19 (1-C-9) WATER PUMP

REF NO.	PART NO.	DESCRIPTION	Q'TY	REMARKS
1	17400-24F10	PUMP ASSY, WATER	1	
2	17411-24F00	.CASE	1	
3	17491-17E01	.IMPELLER	1	
4	09168-06025	.GASKET (6X15X2.2)	1	
5	17470-02F10	.SEAL, MECHANICAL	1	
6	17461-48G00	.OIL SEAL	1	
7	17511-24F10	.SHAFT	1	
8	17432-07G00	.WASHER	1	
9	09164-06006	.WASHER	1	
10	17418-33400	.O RING	1	
11	17435-33400	.O RING	1	
12	02112-0616A	.SCREW	2	
13	09100-06099	.BOLT (6X13)	1	
14	01547-0635A	BOLT	2	

FIG.20

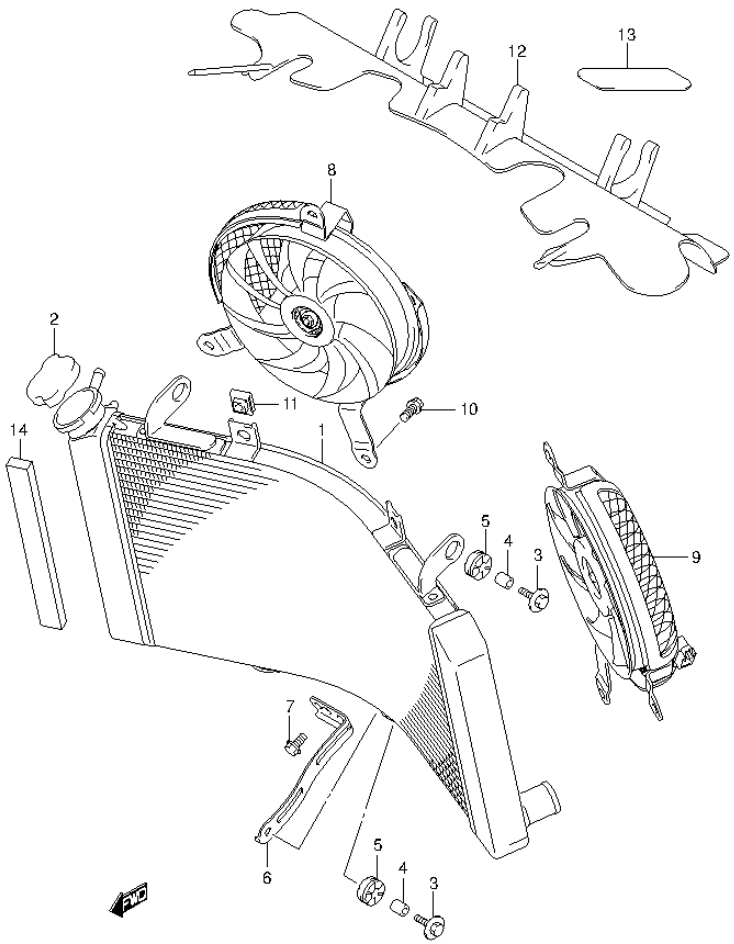

FIG.20 (1-C-10) RADIATOR (GSX1300RAL4 E99)

REF NO.	PART NO.	DESCRIPTION	Q'TY	REMARKS
1	17710-15H00	RADIATOR ASSY, WATER	1	
2	17730-08J00	CAP	1	
3	09118-06097	BOLT (6X25)	3	
4	09180-06290	SPACER (6.5X10X12)	3	
5	09320-10051	CUSHION	5	
6	17750-24F00	BRACKET, RADIATOR LOWER	1	
7	01550-0612A	BOLT	2	
8	17810-15H00	FAN ASSY, RADIATOR RH	1	
9	17820-15H00	FAN ASSY, RADIATOR LH	1	
10	17711-08J00	BOLT	6	
11	17712-40F00	NUT	4	
12	17771-15H00	SHIELD, HEAT	1	
13	63131-10F00	TAPE, REAR FENDER	2	
14	94476-17H00	CUSHION, RESERVOIR TANK	1	

FIG.21

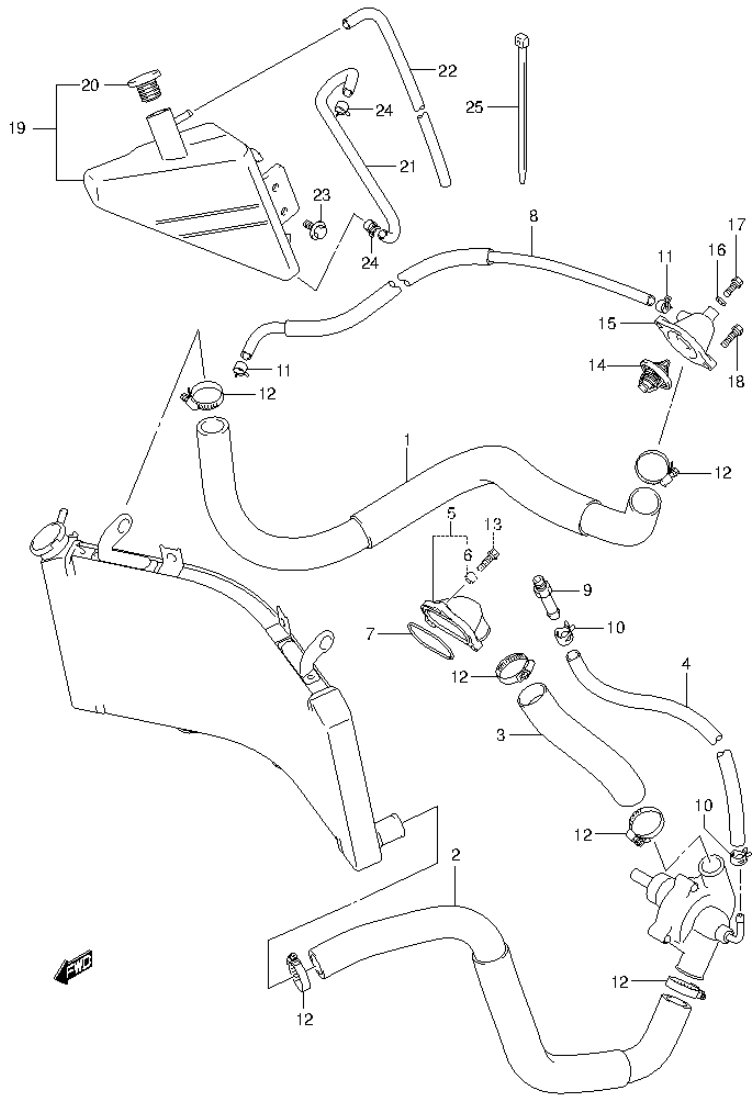

FIG.21 (1-C-11) RADIATOR HOSE

REF NO.	PART NO.	DESCRIPTION	Q'TY	REMARKS
1	17851-15H00	HOSE, RADIATOR INLET	1	
2	17852-15H00	HOSE, RADIATOR OUTLET	1	
3	17853-24F00	HOSE, CYLINDER INLET	1	
4	17854-24F00	HOSE, WATER BYPASS	1	
5	17861-33E20	CONNECTOR	1	
6	09180-06261	.SPACER (6.5X9X8)	3	
7	17863-33E00	O-RING	1	
8	17855-15H00	HOSE, WATER AIR BLEED	1	
9	09362-09011	UNION	1	
10	09401-12409	CLAMP	2	
11	09401-10409	CLIP	2	
12	09402-35501	CLAMP	6	
13	01547-0620A	BOLT	3	
14	17670-15H00	THERMOSTAT, WATER	1	
15	17661-35F00	COVER, THERMOSTAT	1	
16	09168-06026	GASKET (6.4X11.5X0.8)	1	
17	17568-50F00	UNION, AIR VENT	1	
18	01547-0620A	BOLT	2	
19	17910-15H00	TANK ASSY, RESERVOIR	1	
20	17931-02FA0	.CAP	1	
21	17981-15H00	HOSE, RESERVER TANK INLET	1	
22	17982-22H00	HOSE, RESERVER TANK OVERFLOW	1	
23	09111-06085	BOLT (6X12)	1	
24	09401-08411	CLIP	2	
25	09407-14407	CLAMP (L:145)	1	

FIG.22

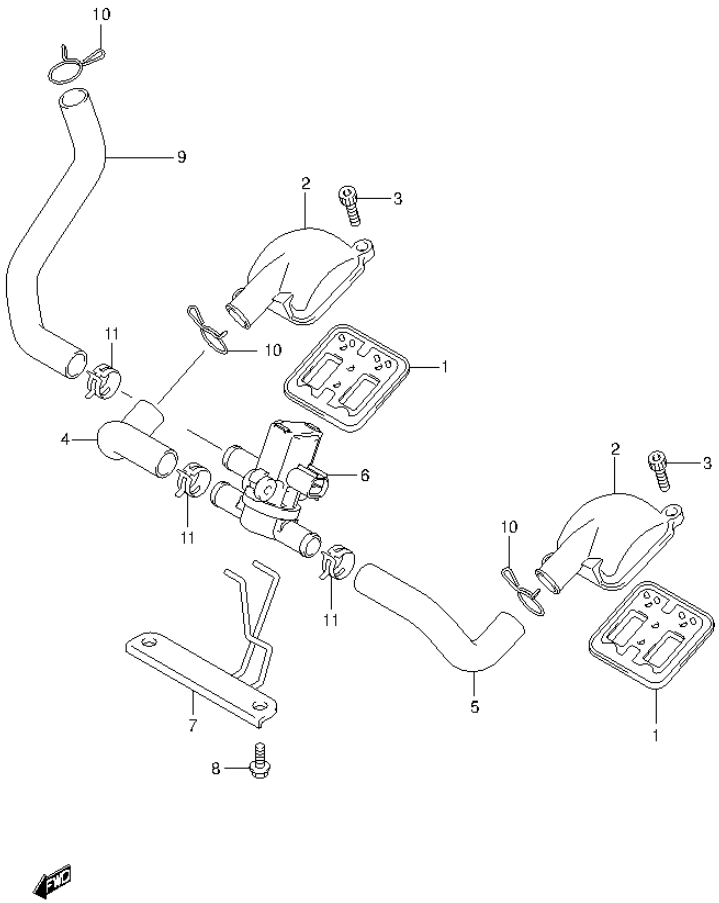

FIG.22 (1-C-12) 2ND AIR

REF NO.	PART NO.	DESCRIPTION	Q'TY	REMARKS
1	18450-35F30	VALVE ASSY, 2ND AIR REED	2	
2	18531-15H00	COVER	2	
3	09106-06073	BOLT (6X16)	4	
4	18461-15H00	HOSE, 2ND AIR VALVE RH	1	
5	18471-15H00	HOSE, 2ND AIR VALVE LH	1	
6	18510-29G31	VALVE ASSY, AIR CUT	1	
7	18610-15H00	BRACKET	1	
8	09103-06283	BOLT (6X16)	2	
9	18711-15H00	HOSE, 2ND AIR CLEANER	1	
10	09401-17201	CLIP	3	
11	09401-17401	CLIP	3	

FIG.23

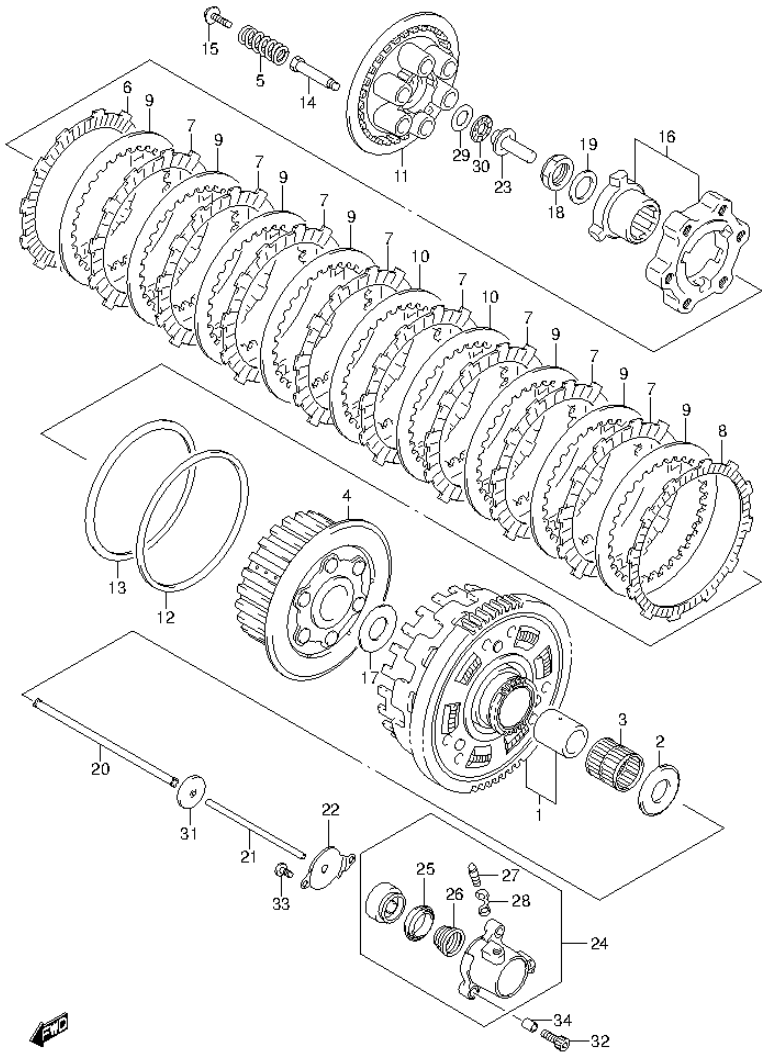

FIG.23 (1-C-13) CLUTCH

REF NO.	PART NO.	DESCRIPTION	Q'TY	REMARKS
1	21200-24810	GEAR ASSY, PRIMARY DRIVEN (NT:83)	1	
2	09160-25073	WASHER (25X54X2.4)	1	
3	09263-35013	BEARING (35X40X39.8)	1	
4	21410-24F00	HUB, CLUTCH SLEEVE	1	
5	21413-24F30	SPRING, CLUTCH	6	
6	21441-24F10	PLATE, CLUTCH DRIVE NO.2 (T:3.8)	1	
7	21441-24F30	PLATE, CLUTCH DRIVE NO.1 (T:3.0)	8	
8	21442-24F00	PLATE, CLUTCH DRIVE NO.3 (T:3.8)	1	
9	21451-24F00	PLATE, CLUTCH DRIVEN NO.1 (T:2.0)	7	
10	21451-24F10	PLATE, CLUTCH DRIVEN NO.2 (T:2.3)	2	
11	21462-24F00	DISC, CLUTCH PRESSURE	1	
12	21471-24F00	SEAT, WAVE WASHER	1	
13	21472-06G00	WASHER, CLUTCH PLATE WAVE	1	
14	21481-24F32	BOLT, CLUTCH SPRING SUPPORT	6	
15	21482-24F30	BOLT, CLUTCH SPRING	6	
16	21610-02F12	CAM SET, CLUTCH	1	
17	09160-25056	WASHER (25X50X2.5)	1	
18	09159-24010	NUT	1	
19	09164-24006	WASHER	1	
20	23110-24F00	ROD, CLUTCH (L:195.5)	1	
21	23111-26D00	ROD, CLUTCH PUSH (L:132.5)	1	
22	23117-46E00	COVER, CLUTCH RELEASE	1	
23	23121-31E00	PIECE, CLUTCH PUSH	1	

FIG.23

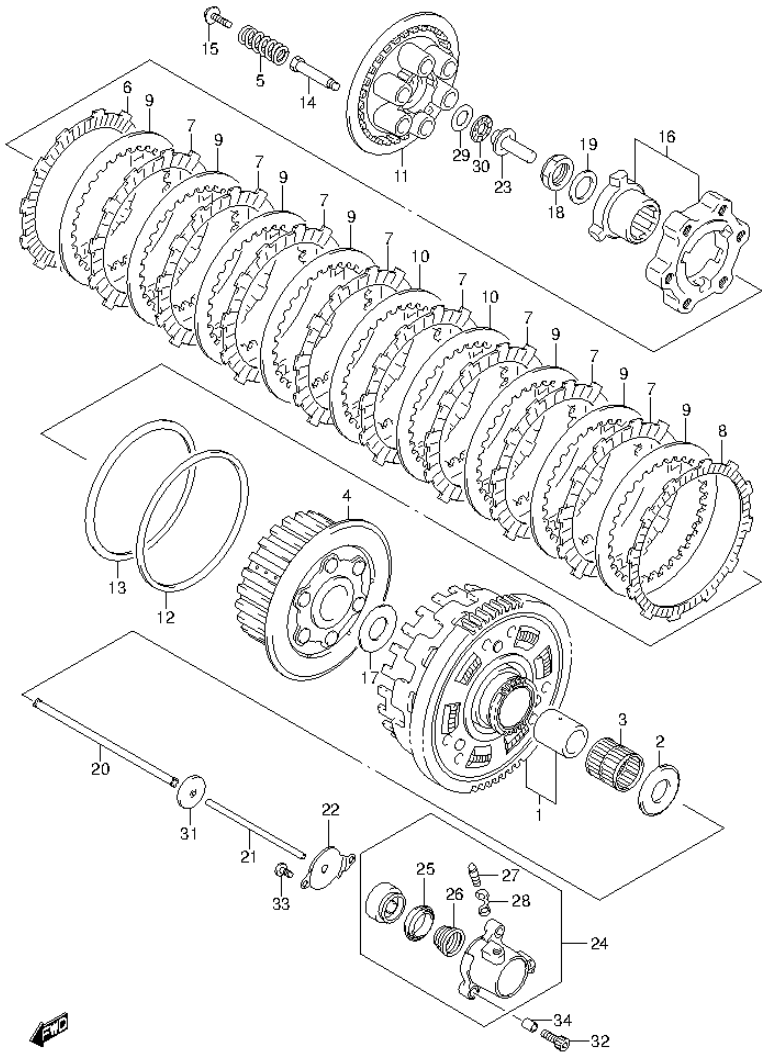

FIG.23 (1-C-14) CLUTCH

REF NO.	PART NO.	DESCRIPTION	Q'TY	REMARKS
24	23160-15H10	CYLINDER, CLUTCH RELEASE	1	
25	23163-10F00	.CUP	1	
26	23164-10F00	.SPRING	1	
27	59121-01A00	.BLEEDER	1	
28	59122-01A00	.CAP, BLEEDER	1	
29	09160-15045	WASHER (15.5X28X1)	1	
30	09263-15003	BEARING (15X28X2)	1	
31	09285-06015	OIL SEAL (6X34X5.5)	1	
32	07130-0625A	BOLT	2	
33	02112-0610A	SCREW	2	
34	04211-09129	PIN	2	

FIG.24

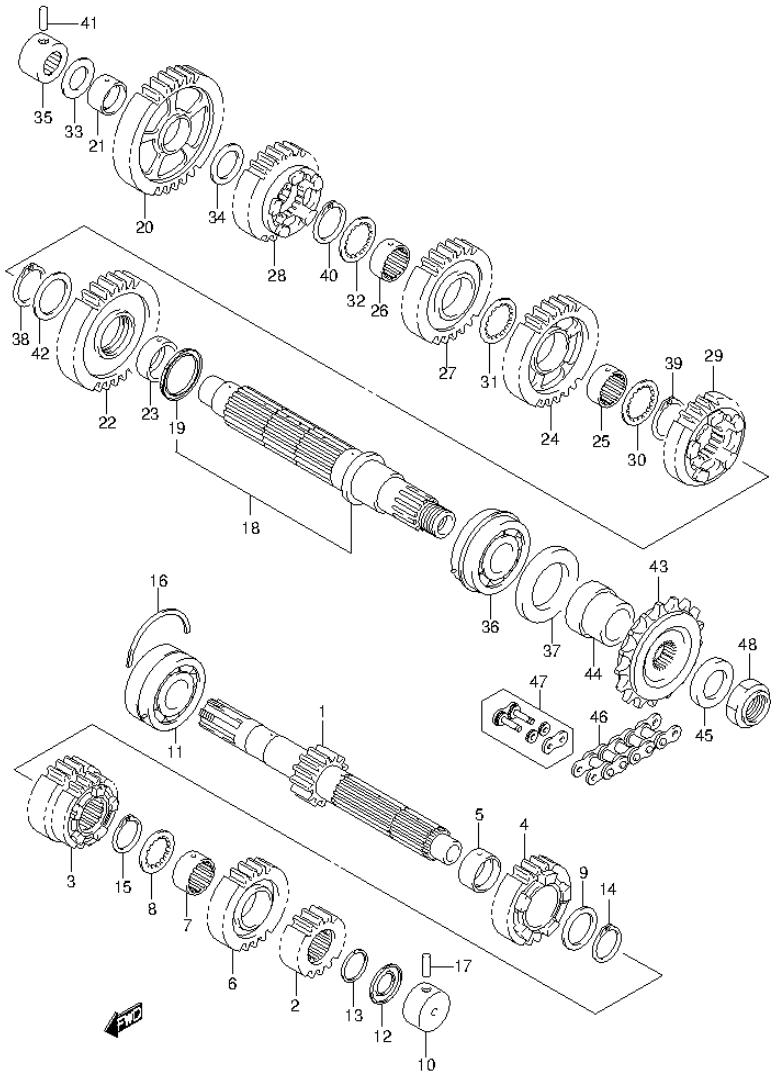

FIG.24 (1-C-15) TRANSMISSION

REF NO.	PART NO.	DESCRIPTION	Q'TY	REMARKS
1	24120-24F00	SHAFT, COUNTER (NT:13)	1	
2	24221-15H00	GEAR, 2ND DRIVE (NT:16)	1	
3	24231-15H00	GEAR, 3RD & 4TH DRIVE (NT:19/21)	1	
4	24251-15H01	GEAR, 5TH DRIVE (NT:22)	1	
5	24252-24F10	BUSH, 5TH DRIVE GEAR	1	
6	24261-15H00	GEAR, 6TH DRIVE (NT:23)	1	
7	24262-24F10	BUSH, 6TH DRIVE GEAR	1	
8	09167-27003	LOCK WASHER	1	
9	09181-27014	SHIM (27X36X2.5)	1	
10	09263-20085	BEARING (20X34X17.5)	1	LH
11	09267-25012	BEARING (25X62X25.4)	1	RH
12	09285-20006	OIL SEAL (20X31.2X2.7)	1	
13	09380-27004	CIRCLIP	1	
14	09380-27006	CIRCLIP	1	
15	09380-27006	CIRCLIP	1	
16	09390-62012	C RING	1	RH
17	04221-07209	PIN	1	LH
18	24130-15H00	SHAFT, DRIVE	1	
19	24136-48G01	.RING, DRIVE SHAFT FRICTION	1	
20	24311-15H00	GEAR, 1ST DRIVEN (NT:34)	1	
21	24312-24F10	BUSH, 1ST DRIVEN GEAR	1	
22	24321-15H00	GEAR, 2ND DRIVEN (NT:31)	1	
23	24322-48G00	BUSH, 2ND DRIVEN GEAR	1	
24	24331-15H00	GEAR, 3RD DRIVEN (NT:29)	1	
25	24332-24F10	BUSH, 3RD DRIVEN GEAR	1	
26	24332-24F10	BUSH, 4TH DRIVEN GEAR	1	
27	24341-15H00	GEAR, 4TH DRIVEN (NT:27)	1	
28	24351-15H01	GEAR, 5TH DRIVEN (NT:25)	1	
29	24361-15H00	GEAR, 6TH DRIVEN (NT:24)	1	
30	09167-30008	LOCK WASHER	1	
31	09167-30008	LOCK WASHER	1	
32	09167-30008	LOCK WASHER	1	
33	09181-20251	SHIM (20X34X1)	1	

FIG.24

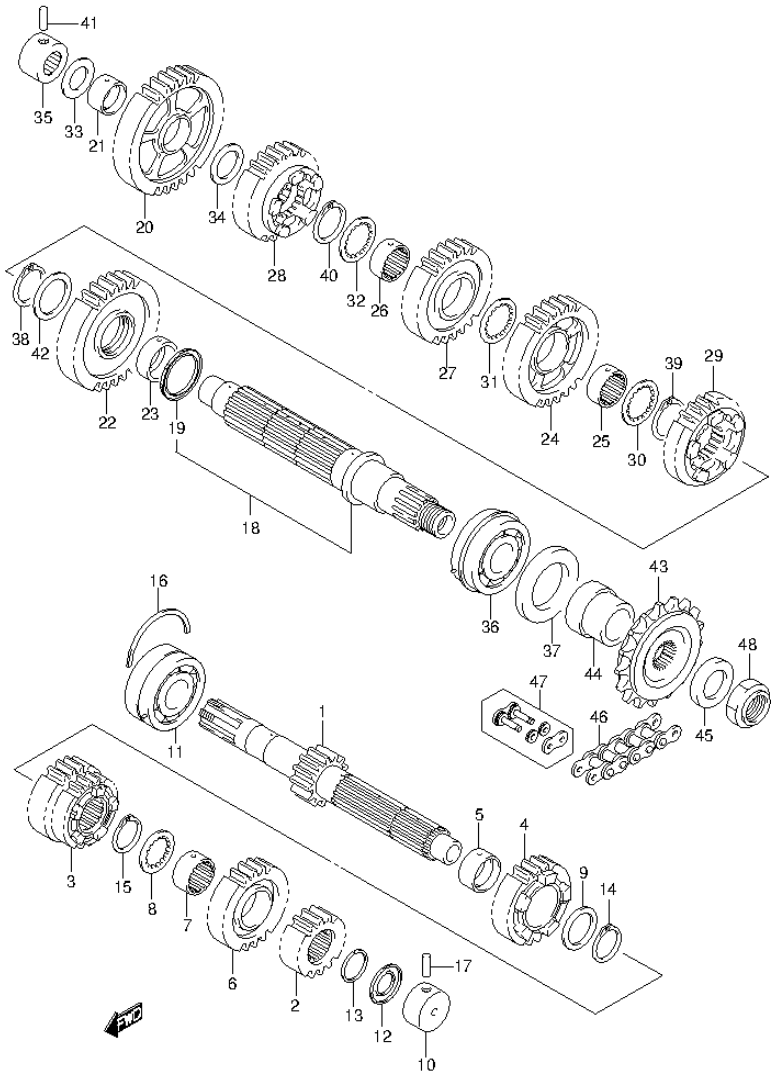

FIG.24 (1-D-2) TRANSMISSION

REF NO.	PART NO.	DESCRIPTION	Q'TY	REMARKS
34	09181-24005	SHIM (24X34X1)	1	
35	09263-20040	BEARING (20X34X20)	1	RH
36	09267-30011	BEARING (30X62X23.8)	1	LH
37	09283-42018	OIL SEAL (42X62X7)	1	
38	09380-30009	CIRCLIP	1	
39	09380-30009	CIRCLIP	1	
40	09380-30009	CIRCLIP	1	
41	04221-07209	PIN	1	
42	08211-30405	WASHER	1	
43	27510-15H00	SPROCKET, ENGINE (NT:18)	1	
44	27531-15H00	SPACER, ENGINE SPROCKET NO.1	1	
45	27532-15H00	SPACER, ENGINE SPROCKET NO.2	1	
46	27600-24F60-118	CHAIN ASSY, DRIVE	1	
		(RK GB50GSVZ4)		L:118->114
47	27620-24F60	JOINT SET, DRIVEN	1	OPT
48	09159-22008	NUT	1	

FIG.25

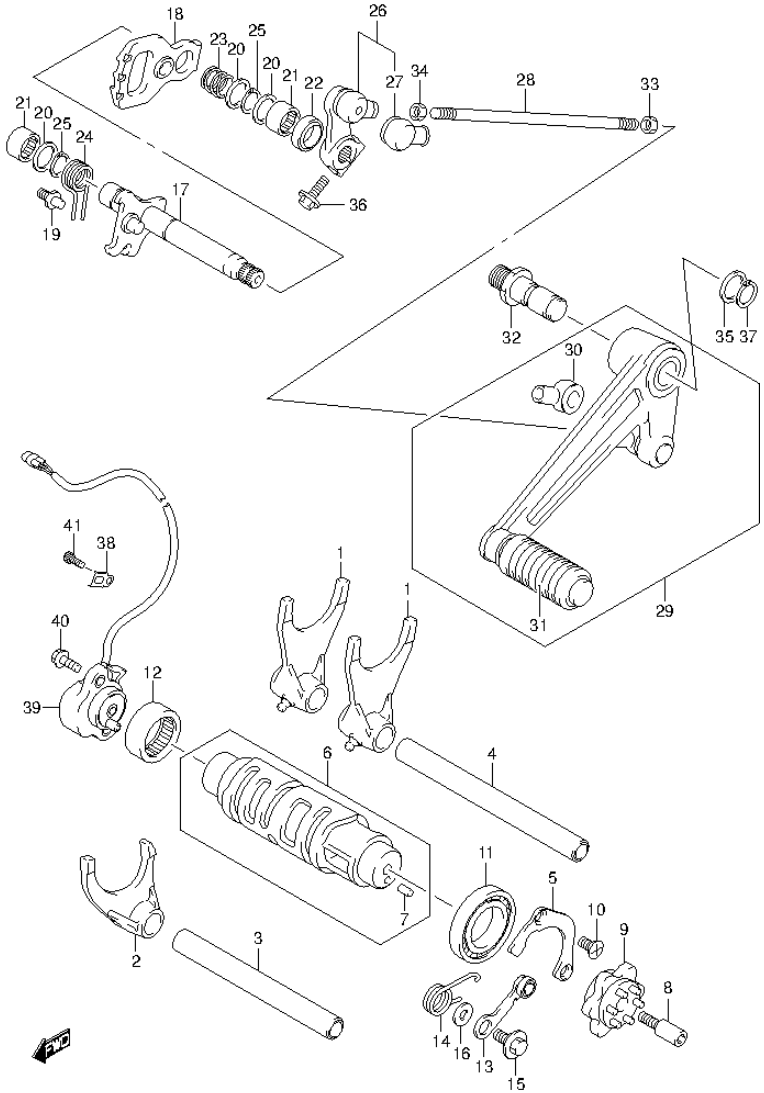

FIG.25 (1-D-3) GEAR SHIFTING

REF NO.	PART NO.	DESCRIPTION	Q'TY	REMARKS
1	25211-24F20	FORK, GEAR SHIFT NO.1	2	
2	25231-24F20	FORK, GEAR SHIFT NO.3	1	
3	25411-24F00	SHAFT, GEAR SHIFT NO.2	1	L:132
4	25411-38B01	SHAFT, GEAR SHIFT NO.1	1	L:152
5	24741-24F10	RETAINER, SHIFT CAM BEARING	1	
6	25310-24F00	CAM, GEAR SHIFT	1	
7	04221-04089	.PIN	1	
8	25312-42F01	STOPPER, SHIFT CAM DRIVE PLATE	1	
9	25381-13E00	PLATE, GEAR SHIFT CAM	1	
10	09126-06011	SCREW (6X12)	2	
11	09262-25006	BEARING (25X47X8)	1	
12	09263-25018	BEARING (25X32X12)	1	RH
13	25350-24F00	STOPPER, SHIFT CAM	1	
14	25355-24F00	SPRING, SHIFT CAM STOPPER	1	
15	09111-06041	BOLT (6X14.3)	1	
16	08211-06141	WASHER	1	
17	25510-15H00	SHAFT, GEAR	1	
18	25512-06G10	PLATE, GEAR SHIFT CAM DRIVE	1	
19	25671-01011	STOPPER, GEAR SHIFT ARM	1	
20	09181-14167	SHIM (14X22X1)	3	RH
21	09263-14027	BEARING (14X20X12)	2	
22	09283-14005	OIL SEAL (14X22X7.3)	1	
23	09440-17009	SPRING	1	
24	09444-20001	SPRING	1	
25	08331-3114A	CIRCLIP	2	
26	25520-40F00	ARM, GEAR SHIFT LINK	1	
27	25526-47000	.COVER, DUST	1	
28	25525-19F00	ROD, GEAR SHIFT LINK (L:150)	1	
29	25600-17G01	LEVER ASSY, GEAR SHIFT	1	
30	25526-47000	.COVER, DUST	1	
31	25652-20C00	.RUBBER, GEAR SHIFT PEDAL	1	
32	25617-03F10	SHAFT, GEAR SHIFT LEVER	1	
33	09140-06020	NUT	1	
34	09140-06025	NUT	1	LH

FIG.25

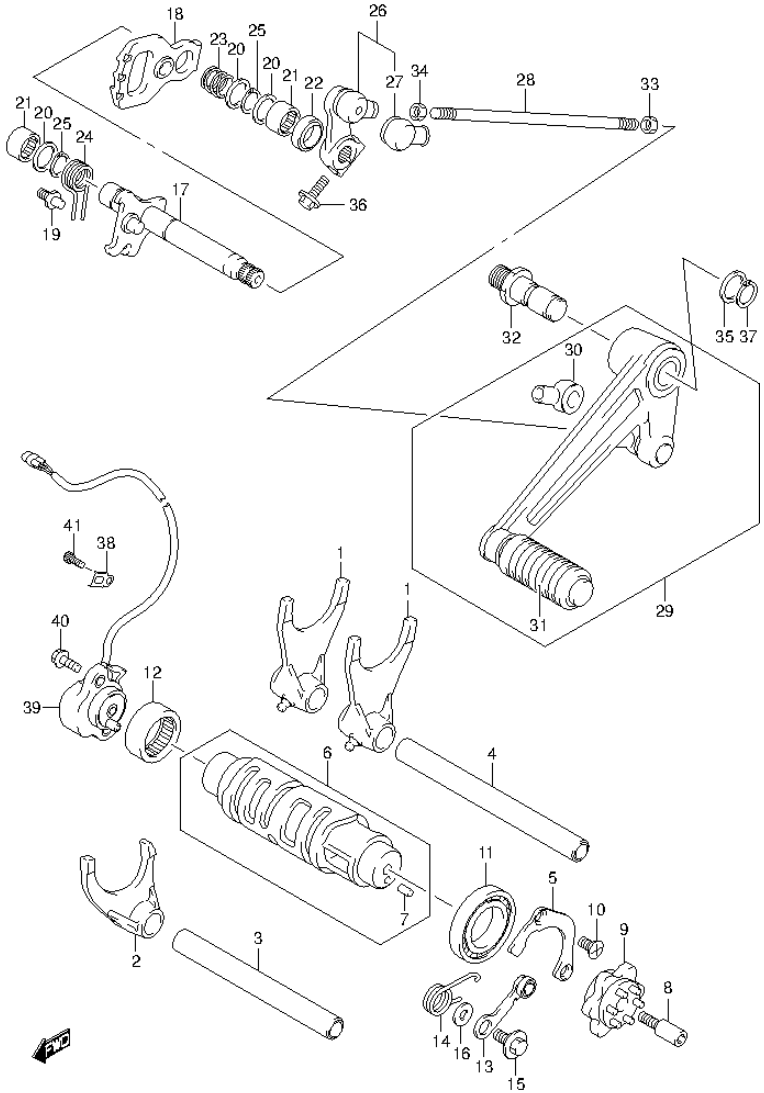

FIG.25 (1-D-4) GEAR SHIFTING

REF NO.	PART NO.	DESCRIPTION	Q'TY	REMARKS
35	09160-12011	WASHER (12.5X20X1)	1	
36	01500-0625A	BOLT	1	
37	08331-3112A	CIRCLIP	1	
38	31497-45000	CLAMP, POSITION SENSOR LEAD	3	
39	37730-15H01	SENSOR ASSY, GEAR POSITION	1	
40	07120-0516A	BOLT	2	
41	07130-0510A	BOLT	3	

FIG.26

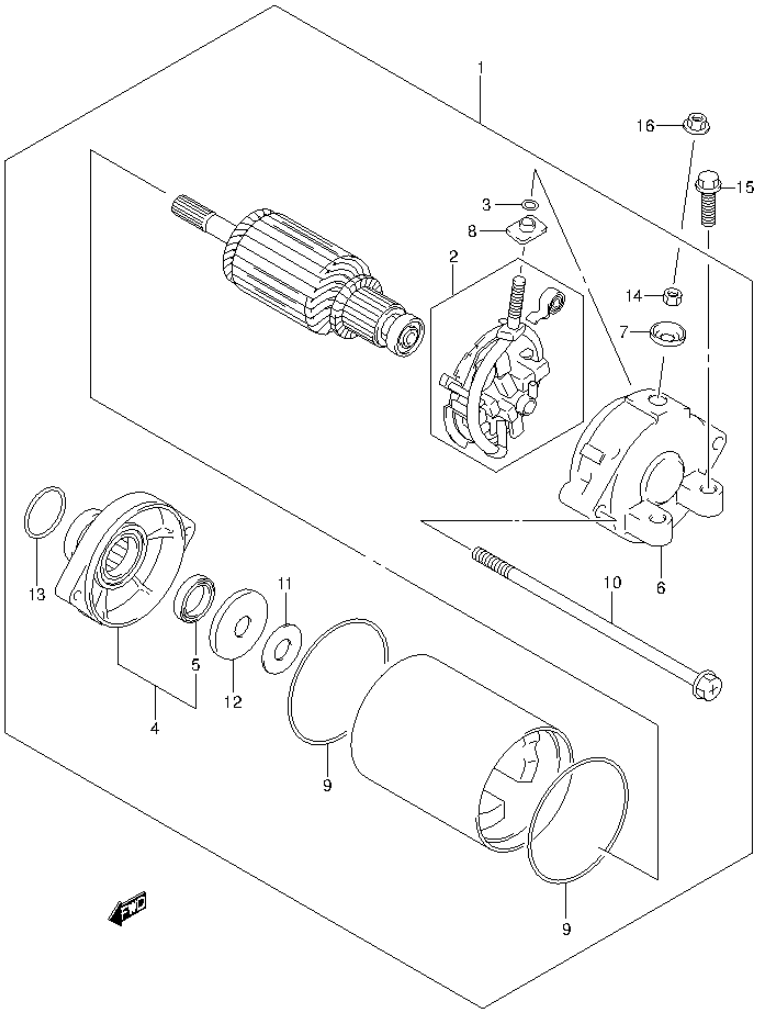

FIG.26 (1-D-5) STARTING MOTOR

REF NO.	PART NO.	DESCRIPTION	Q'TY	REMARKS
1	31100-15H20	MOTOR ASSY, STARTING	1	
2	31132-45C00	.HOLDER SET, BRUSH	1	
3	31143-38300	.O RING	1	
4	31150-15H20	.HOUSING ASSY, STARTER	1	
5	31153-49210	..OIL SEAL	1	
6	31171-24F00	.FRAME, STARTER END	1	
7	31172-38300	.BUSHING	1	
8	31173-88C00	.BUSHING	1	
9	31264-44110	.O RING	2	
10	31281-24F00	.BOLT	2	
11	31361-38300	.SHIM	2	
12	31361-43400	.WASHER	1	
13	09280-24003	.O RING (D:3,ID:24.5)	1	
14	08310-00067	.NUT	1	
15	09103-06212	BOLT (6X25)	2	
16	08361-3506A	NUT	1	

FIG.27

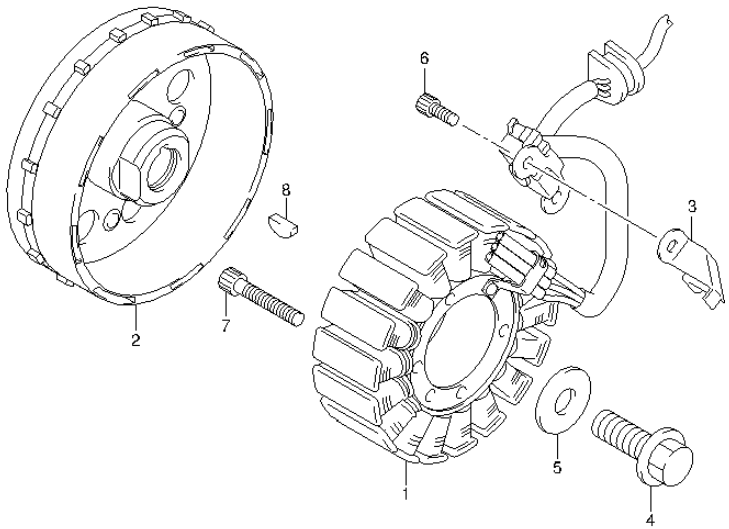

FIG.27 (1-D-6) MAGNETO

REF NO.	PART NO.	DESCRIPTION	Q'TY	REMARKS
1	32101-24F20	STATOR ASSY, MAGNETO	1	
2	32102-24F20	ROTOR ASSY, MAGNETO	1	
3	32371-24F00	CLAMP, MAGNETO LEAD	1	
4	09103-12028	BOLT (12X30)	1	
5	09160-12036	WASHER (12X30X3)	1	
6	07130-0512A	BOLT	2	
7	07130-0635A	BOLT	3	
8	09420-04008	KEY	1	

FIG.28

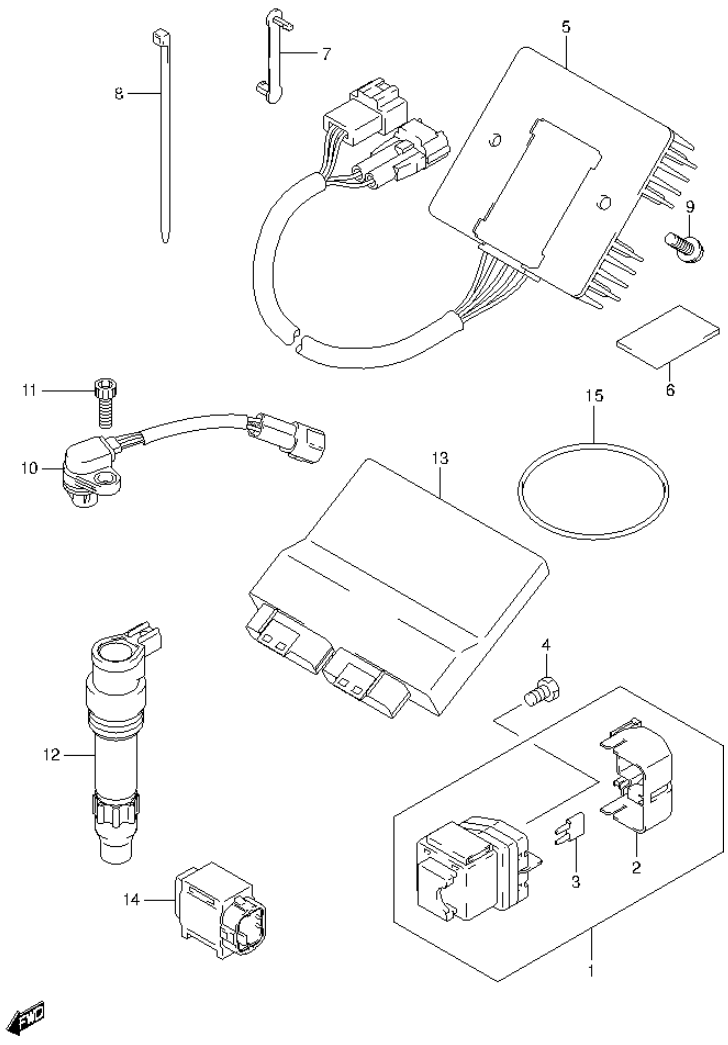

FIG.28 (1-D-7) ELECTRICAL (GSX1300RAL4 E99)

REF NO.	PART NO.	DESCRIPTION	Q'TY	REMARKS
1	31800-44G00	RELAY ASSY, STARTING MOTOR	1	
2	31861-38G00	.COVER, RECTIFIER	1	
3	09481-30501	.FUSE (30A)	2	
4	09128-06013	SCREW (6X8)	2	
5	32800-10G40	RECTIFIER ASSY	1	
6	33652-36000	PROTECTOR (30X50X3)	1	
7	36651-48E00	CLAMP, RECTIFIER LEAD	1	
8	09407-14407	CLAMP (L:145)	1	
9	02162-0616A	SCREW	2	
10	33220-01H00	SENSOR ASSY, CAM POSITION	1	
11	07130-0616A	BOLT	1	
12	33410-24F10	COIL ASSY, IGNITION	4	
13	32920-15HF0	CONTROL UNIT, FI	1	
14	33960-06G10	SENSOR ASSY, FUEL CUT	1	
15	09280-76005	O RING (D:3.5,ID;76)	1	

FIG.29

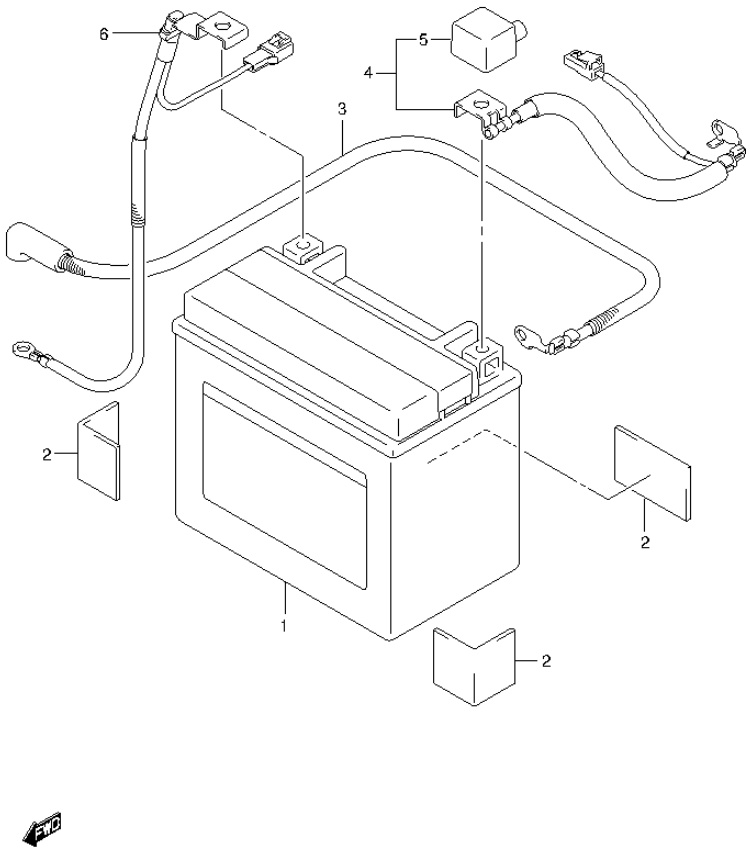

FIG.29 (1-D-8) BATTERY (GSX1300RAL4 E99)

REF NO.	PART NO.	DESCRIPTION	Q'TY	REMARKS
1	33610-17E10	BATTERY ASSY	1	
		(YTX12-BS,12V10AH)		
2	33652-36000	PROTECTOR, BATTERY	3	
3	33810-15H00	WIRE, STARTER MOTOR LEAD	1	
4	33820-15H10	WIRE, BATTERY PLUS LEAD	1	
5	33624-16G00	.CAP, BATTERY PLUS	1	
6	33860-15H00	WIRE, BATTERY MINUS LEAD	1	

FIG.30

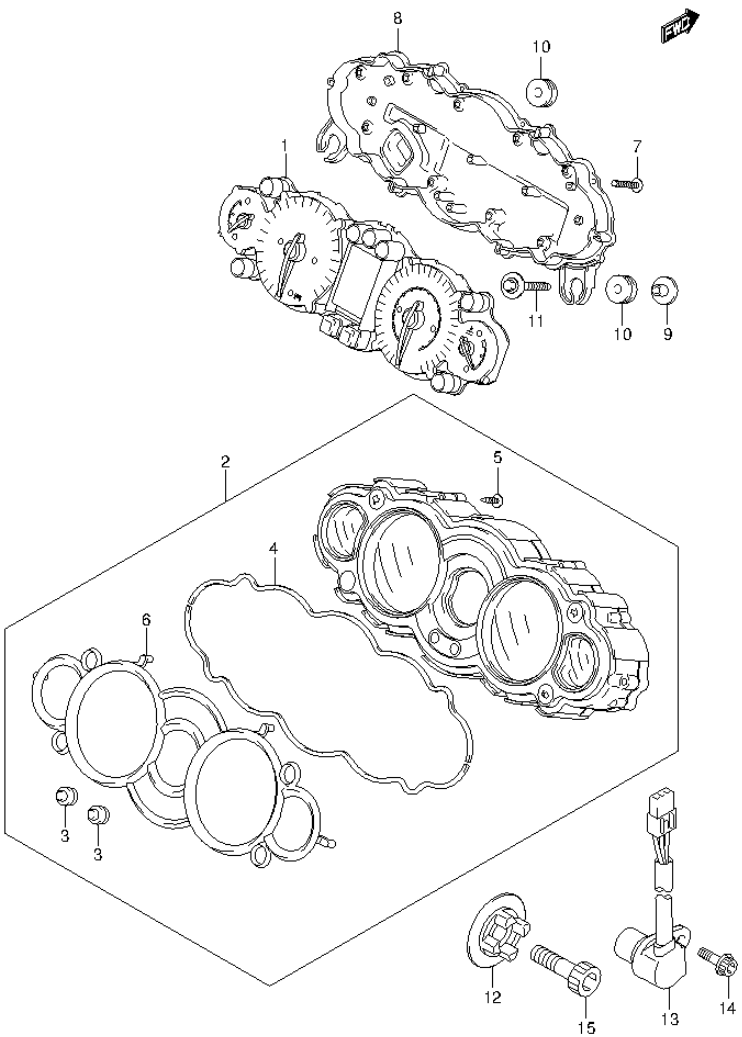

FIG.30 (1-D-9) SPEEDOMETER (GSX1300RAL4 E99)

REF NO.	PART NO.	DESCRIPTION	Q'TY	REMARKS
1	34120-15H20	COMBINATION METER	1	
2	34150-15H00	UPPER CASE ASSY	1	
3	34124-39G00	.SWITCH RUBBER	2	
4	34153-15H00	.PACKING	2	
5	34183-31F10	.SCREW (2.3X8)	6	
6	34193-15H00	.RING	1	
7	09132-03008	SCREW (3X16)	20	
8	34111-15H01	LOWER CASE ASSY	1	
9	34187-24F00	WASHER, SPEEDOMETER	2	
10	34955-13E00	CUSHION, SPEEDOMETER	4	
11	09116-06186	BOLT (6X25)	2	
12	34981-47H01	ROTOR, SPEED	1	
13	34990-35F00	SENSOR, SPEED	1	
14	07120-0512B	BOLT	1	
15	07130-0825B	BOLT	1	

FIG.31

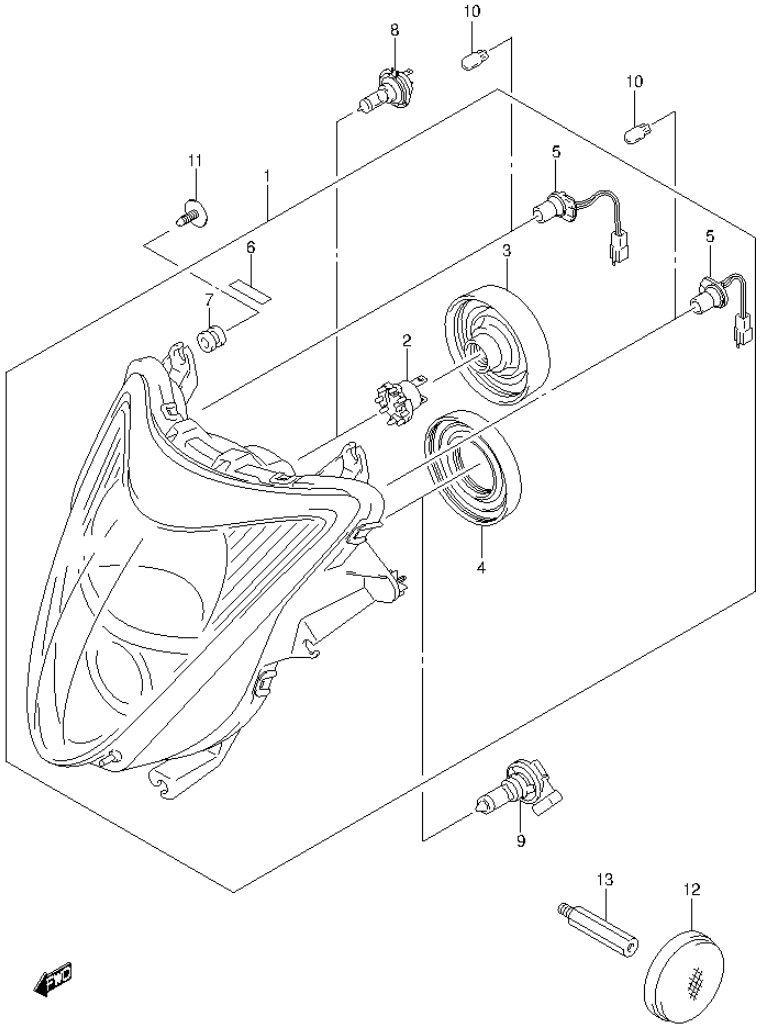

FIG.31 (1-D-10) HEADLAMP (GSX1300RAL4 E99)

REF NO.	PART NO.	DESCRIPTION	Q'TY	REMARKS
1	35100-15H01-999	HEADLAMP ASSY	1	
2	35175-24F00	.ADAPTOR ASSY	1	
3	35173-15H00	.SOCKET, COVER	1	
4	35173-14G00	.SOCKET, COVER	1	
5	36118-15H00	.CORD ASSY	2	
6	94443-21H00	.TAPE (5X20X0.4)	1	
7	09320-09039	.CUSHION	6	
8	09471-12188	BULB (12V,55W)	1	
9	09471-12222	BULB (12V,65W)	1	
10	09471-12216	BULB (12V,5W)	2	
11	09136-05062	SCREW (5X15)	6	
12	35950-14A11	REFLEX REFLECTOR ASSY, FR SIDE	2	
13	09119-06104	BOLT, FR SIDE	2	

FIG.32

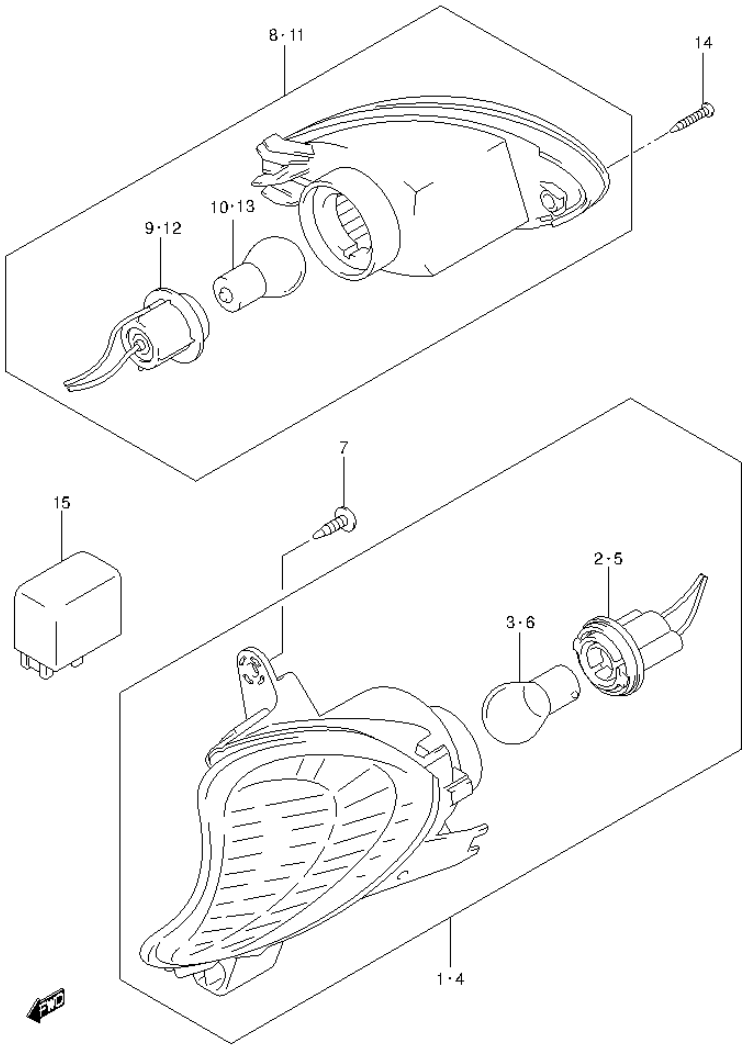

FIG.32 (1-D-11) TURNSIGNAL LAMP

REF NO.	PART NO.	DESCRIPTION	Q'TY	REMARKS
1	35601-15H01	LAMP ASSY, FRONT TURN, RH	1	
2	35618-15H00	.SOCKET & CORD, RH	1	
3	09471-12186	.BULB (12V,21W)	1	
4	35602-15H01	LAMP ASSY, FRONT TURN, LH	1	
5	35638-15H00	.SOCKET & CORD, LH	1	
6	09471-12186	.BULB (12V,21W)	1	
7	03541-0516B	SCREW	4	
8	35603-15H01	LAMP ASSY, REAR TURN, RH	1	
9	35658-15H00	.SOCKET & CORD, RH	1	
10	09471-12186	.BULB (12V,21W)	1	
11	35604-15H01	LAMP ASSY, REAR TURN, LH	1	
12	35678-15H00	.SOCKET & CORD, LH	1	
13	09471-12186	.BULB (12V,21W)	1	
14	09132-04032	SCREW (4X20)	2	
15	38610-03F00	RELAY ASSY, TURNSIGNAL LAMP	1	

FIG.33

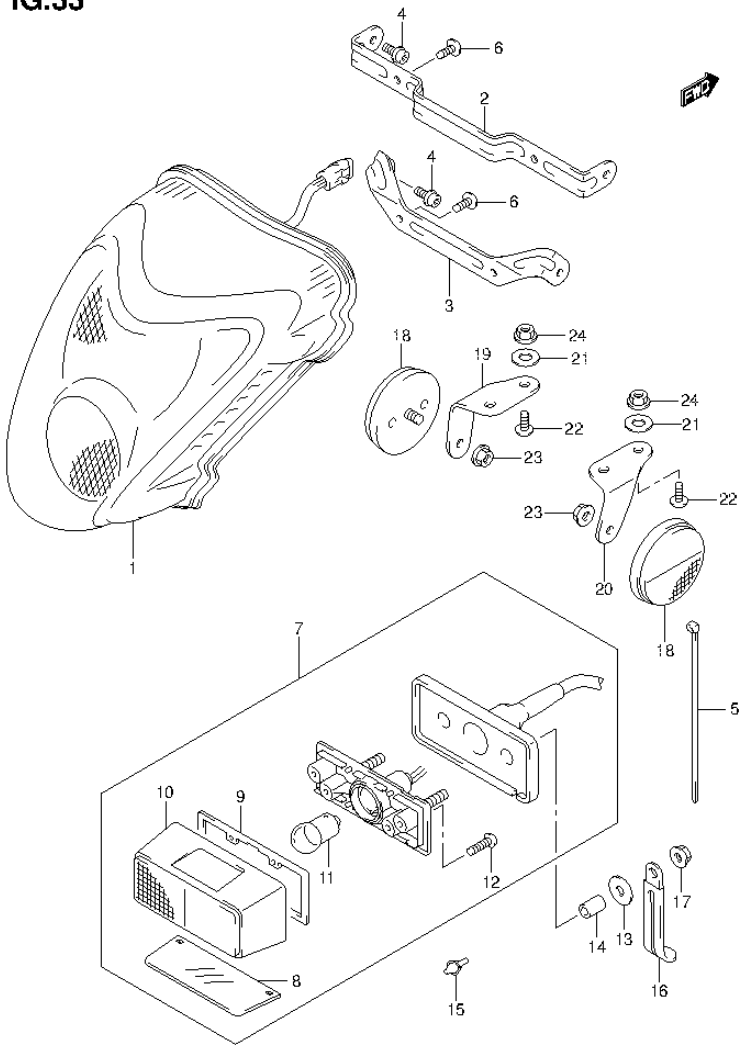

FIG.33 (1-D-12) REAR COMBINATION LAMP (GSX1300RAL4 E99)

REF NO.	PART NO.	DESCRIPTION	Q'TY	REMARKS
1	35710-15H01	LAMP ASSY, RR COMBINATION	1	
2	35726-15H00	BRACKET, RR COMBINATION	1	
3	35726-15H10	BRACKET, RR COMBINATION	1	
4	09106-05031	BOLT (5X12)	4	
5	09407-14407	CLAMP (L:145)	1	
6	03541-0516A	SCREW	4	
7	35910-41G01	LAMP ASSY, LICENSE	1	
8	35912-41G01	.LENS, LICENSE	1	
9	35913-41G00	.GASKET	1	
10	35917-41G00	.COVER, LICENSE LAMP	1	
11	09471-12140	.BULB (12V,5W)	1	
12	03211-0416A	.SCREW	2	
13	09160-06077	WASHER (6.5X20X1.2)	2	
14	09180-06264	SPACER (6.5X9X10.5)	2	
15	09321-06032	CUSHION	1	
16	09404-06429	CLAMP (L:45)	1	
17	08316-1006A	NUT	2	
18	35970-14A20	REFLECTOR ASSY, REAR SIDE	2	
19	35975-15H00	BRACKET, REAR SIDE REAR RH	1	
20	35976-15H00	BRACKET, REAR SIDE REAR LH	1	
21	02142-0612A	SCREW	4	
22	09160-06126	WASHER (6.5X14X2)	4	
23	08316-1005A	NUT	2	
24	08316-1006A	NUT	4	

FIG.34

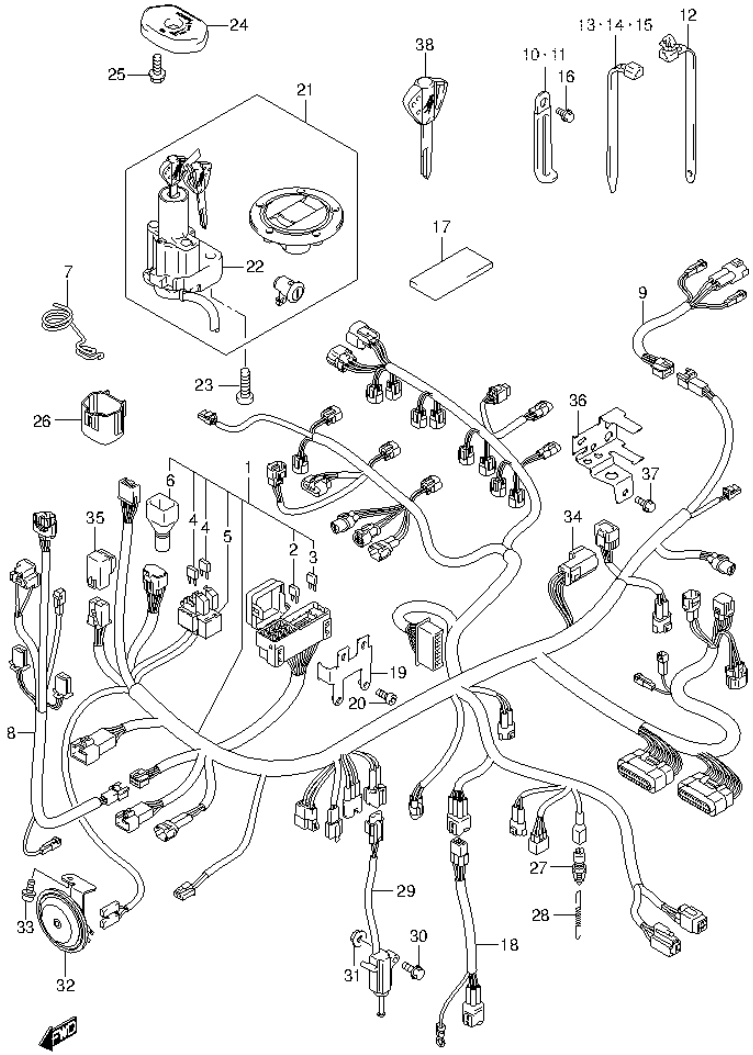

FIG.34 (1-D-13) WIRING HARNESS (GSX1300RAL4 E99)

REF NO.	PART NO.	DESCRIPTION	Q'TY	REMARKS
1	36610-15HC0	HARNESS, WIRING	1	
2	09481-10501	.FUSE (10A)	4	
3	09481-15501	.FUSE (15A)	2	
4	09481-15101	.FUSE (15A)	2	
5	36742-45G00	.HOLDER	1	
6	36618-33E00	.BOOT, METER	1	
7	36619-15H00	GUIDE, WIRING HARNESS	1	
8	36620-15H00	HARNESS, WIRING NO.2	1	
9	36857-15H00	WIRE, REAR COMB	1	
10	09404-06429	CLAMP (L:45)	4	
11	09404-06435	CLAMP (L:135)	1	
12	09407-14408	CLAMP (L:120)	1	
13	09407-14403	CLAMP (L:125)	6	
14	09407-18402	CLAMP (L:165)	4	
15	09407-14407	CLAMP (L:145)	1	
16	01550-0610A	BOLT	1	
17	36920-45G00	PROTECTOR, WIRING HARNESS	1	
18	36855-15H10	WIRE, O2 SENSOR	1	
19	36744-24F10	BRACKET, FUSE BOX	1	
20	07120-0510B	BOLT	2	
21	37100-15850	LOCK SET	1	
22	37100-15H80	.LOCK ASSY, STEERING	1	
23	09139-08016	BOLT (8X20)	2	
24	37180-15H00	COVER, STEERING LOCK	1	
25	01547-0530A	BOLT	2	
26	36654-06J00	CAP, TS	1	
27	37740-19F00	SWITCH ASSY, STOP LAMP	1	
28	09443-06012	SPRING	1	
29	37840-24F00	SWITCH ASSY, SIDE STAND	1	
30	09103-08357	BOLT (8X35)	1	
31	08316-1008B	NUT	1	
32	38500-24F20	HORN ASSY	1	
33	07120-0612A	BOLT	1	
34	38740-26E00	RELAY ASSY, FUEL PUMP	1	

FIG.34

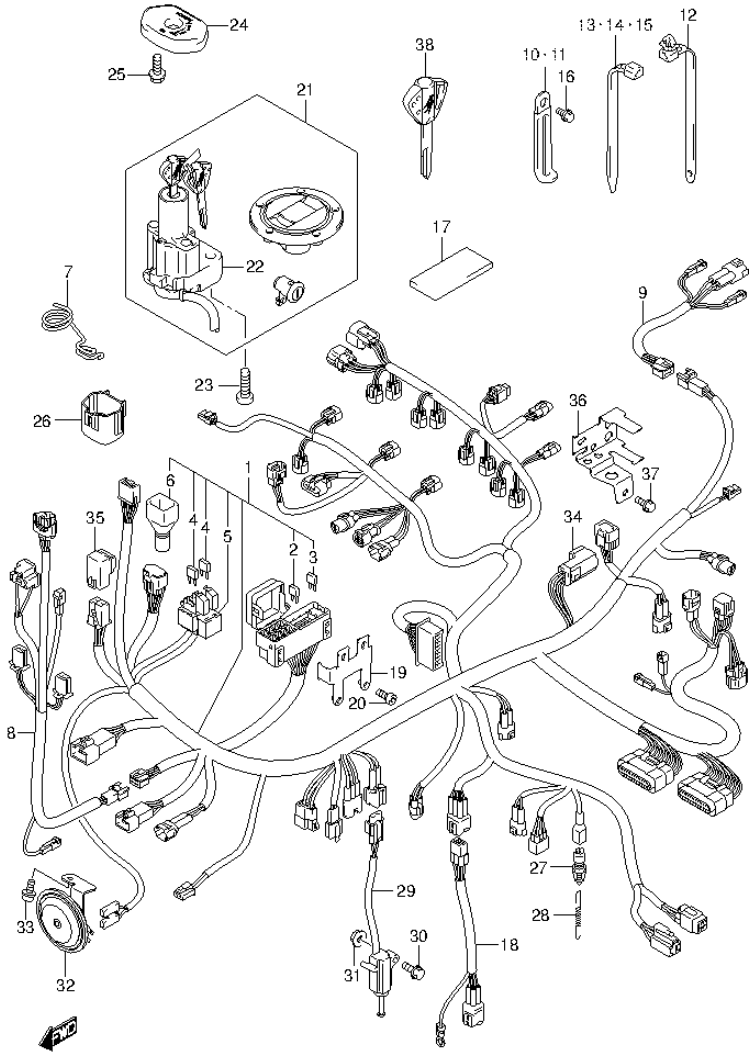

FIG.34 (1-D-14) WIRING HARNESS (GSX1300RAL4 E99)

REF NO.	PART NO.	DESCRIPTION	Q'TY	REMARKS
35	38740-26E00	RELAY ASSY, FAN MOTOR	1	
36	38741-24F00	BRACKET, FUEL PUMP RLY	1	
37	01550-0612B	BOLT	1	
38	37146-15H00	KEY, BLANK	1	OPT

FIG.35

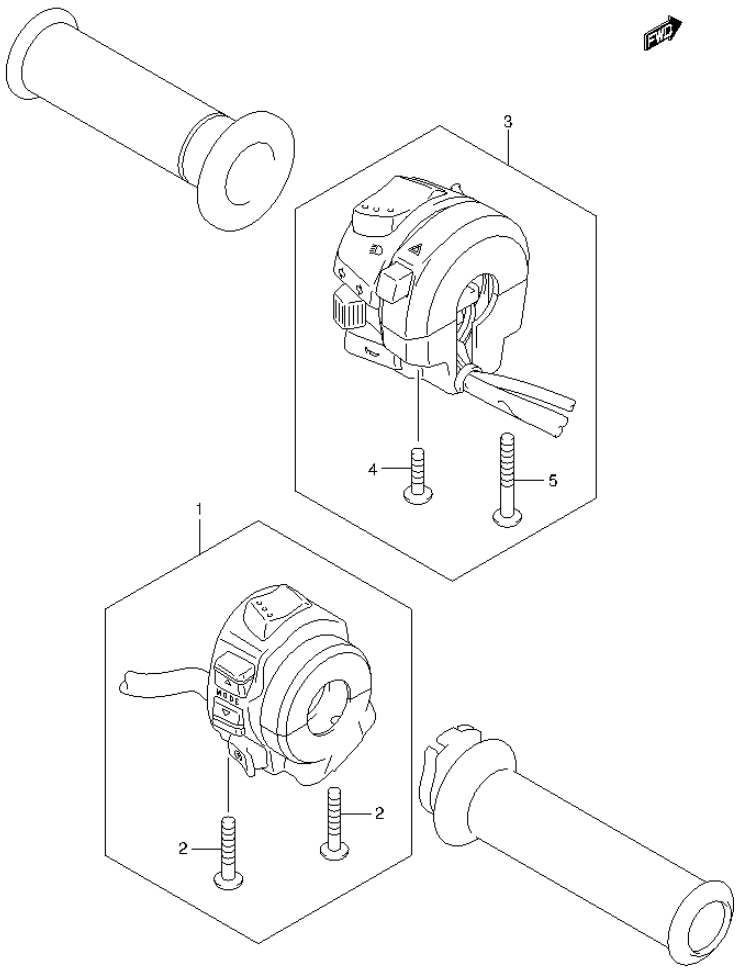

FIG.35 (1-D-15) HANDLE SWITCH (GSX1300RAL4 E99)

REF NO.	PART NO.	DESCRIPTION	Q'TY	REMARKS
1	37200-15H10	SWITCH ASSY, HANDLE, RH	1	
2	02112-0530B	.SCREW	2	
3	37400-18H12	SWITCH ASSY, HANDLE, LH	1	
4	02112-0525B	.SCREW	1	
5	02112-0545B	.SCREW	1	

FIG.36

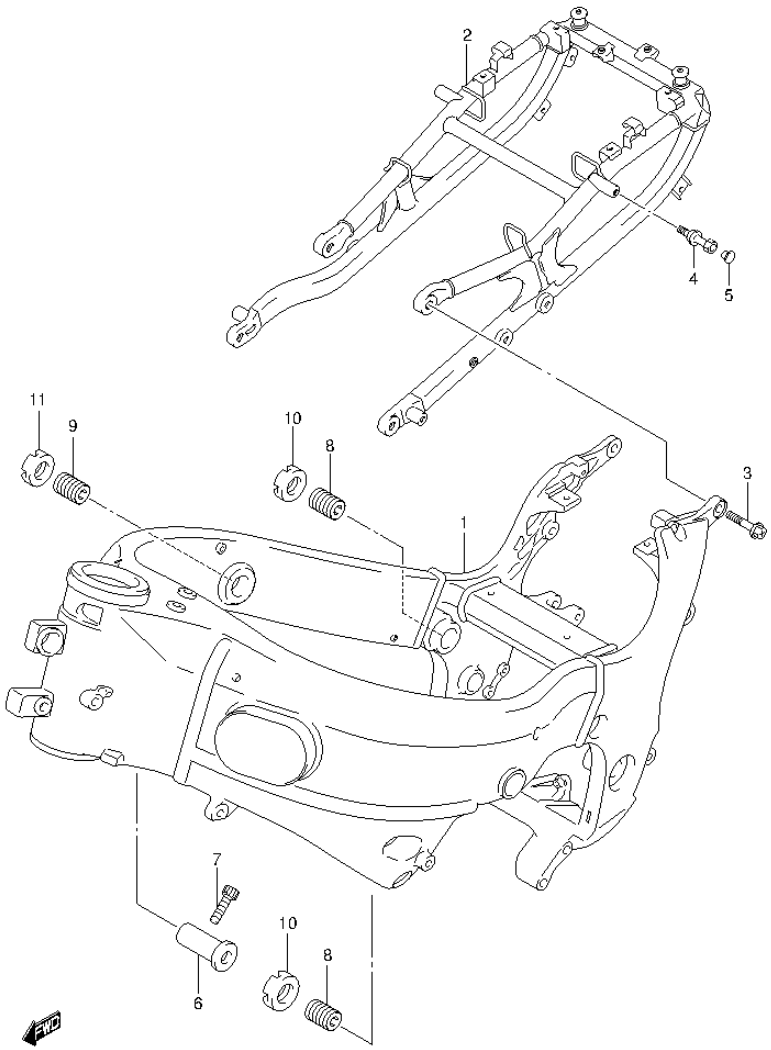

FIG.36 (1-E-2) FRAME

REF NO.	PART NO.	DESCRIPTION	Q'TY	REMARKS
1	41100-15H11-YAP	FRAME (BLACK)	1	
2	41200-15H11	RAIL, SEAT	1	
3	09103-10296	BOLT (10X30)	4	
4	46315-24F01	HOOK, SEAT RAIL	2	
5	09250-05009	CAP (OD:10)	2	
6	41911-33E10	SPACER, ENGINE MOUNT	1	
7	09106-08105	BOLT (8X30)	1	
8	41921-15H20	BOLT, CRANKCASE ADJUST	2	
9	41921-15H30	BOLT, CRANKCASE ADJUST	1	
10	41922-19F12	NUT, CRANK CASE ADJUST	2	
11	41922-33E30	NUT, CRANK CASE ADJUST	1	

FIG.37

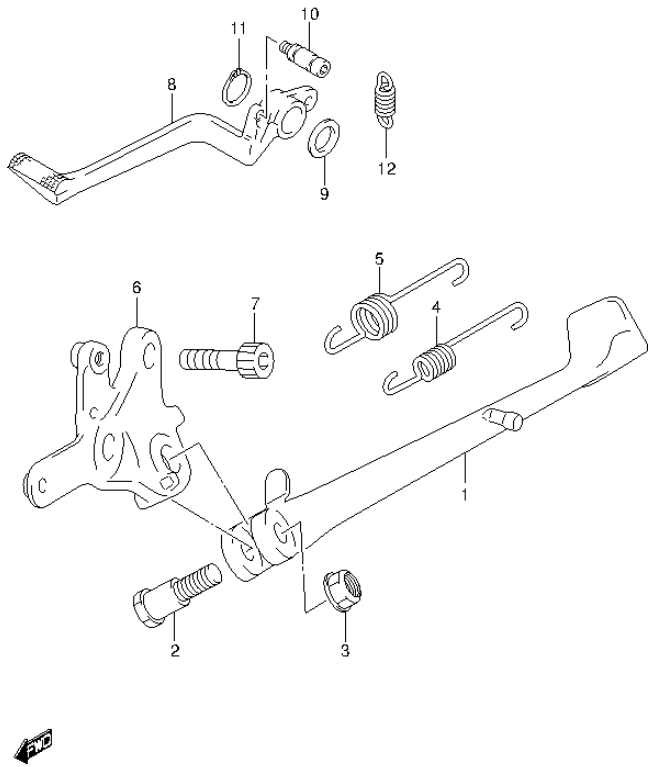

FIG.37 (1-E-3) STAND

REF NO.	PART NO.	DESCRIPTION	Q'TY	REMARKS
1	42310-24F00	STAND, PROP	1	
2	09111-10059	BOLT (10X21)	1	
3	09159-10103	NUT	1	
4	09443-14068	SPRING	1	
5	09443-19015	SPRING	1	
6	42330-24F01	BRACKET, PROP STAND	1	
7	09106-12003	BOLT (12X35)	2	
8	43111-24F00	PEDAL, BRAKE	1	
9	09160-18022	WASHER (18X24X1)	1	
10	43561-24F00	HOOK, RETURN SPRING	1	
11	08331-3118A	CLIP	1	
12	09443-13032	SPRING	1	

FIG.38

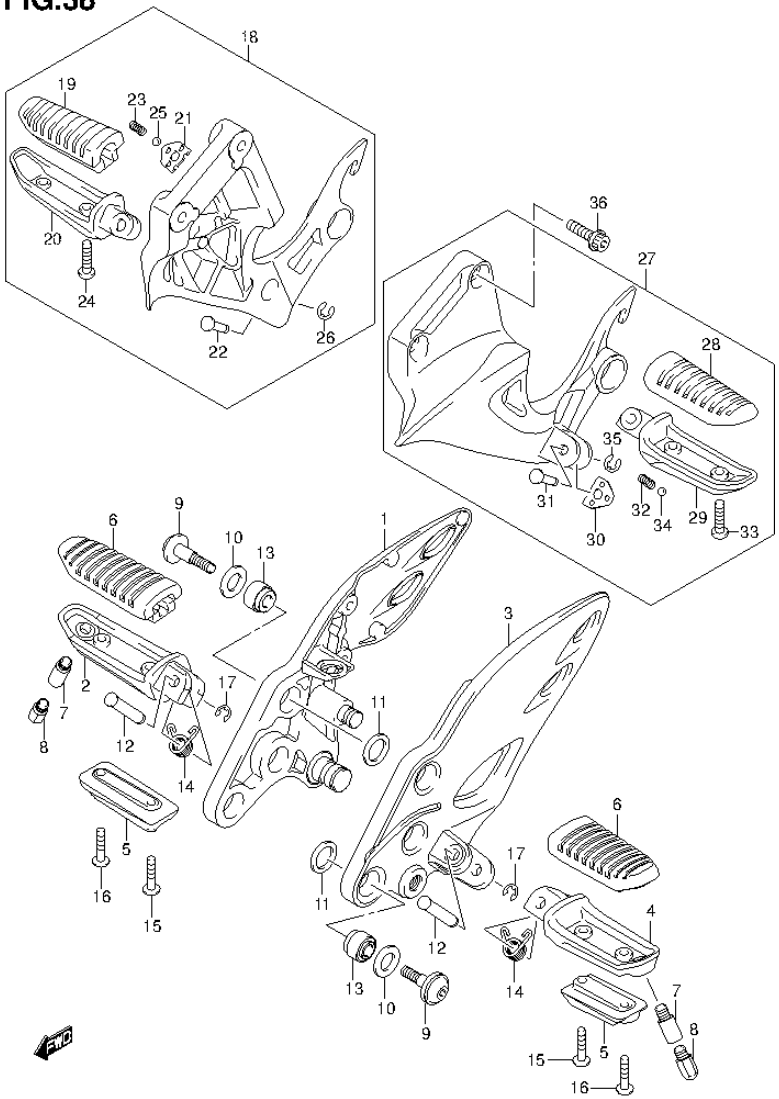

FIG.38 (1-E-4) FOOTREST

REF NO.	PART NO.	DESCRIPTION	Q'TY	REMARKS
1	43510-15H00	BRACKET, FRONT FOOTREST RH	1	
2	43511-44G10	BAR, FRONT FOOTREST RH	1	
3	43521-15H00	BRACKET, FRONT FOOTREST LH	1	
4	43521-44G10	BAR, FRONT FOOTREST LH	1	
5	43536-44G00	BALANCER, FRONT FOOTREST	2	
6	43550-44G10	RUBBER, FOOTREST	2	
7	43576-15H00	BOLT, BANK SENSOR	2	
8	43576-15H10	BOLT, BANK SENSOR	2	
9	09106-08147	BOLT (8X30)	6	
10	09161-13004	WASHER (13.7X24X2)	6	
11	09161-17002	WASHER (17.2X24X2.2)	6	
12	09208-08019	PIN	2	
13	09319-08045	BUSH (8.4X20X16)	6	
14	09448-14046	SPRING	2	
15	02142-0525A	SCREW	2	
16	02142-0530A	SCREW	2	
17	08332-1106A	E RING	2	
18	43600-15H00	FOOTREST ASSY, PILLION RH	1	
19	43550-44G00	.RUBBER	1	
20	43611-44G00	.BAR, PILLION FOOTREST RH	1	
21	43816-01H10	.PLATE, PILLION FOOTREST	1	
22	09208-08020	.PIN	1	
23	09440-05003	.SPRING	1	
24	02142-0516A	.SCREW	2	
25	06111-07004	.BALL	1	
26	08332-1106A	.E RING	1	
27	43700-15H00	FOOTREST ASSY, PILLION LH	1	
28	43550-44G00	.RUBBER	1	
29	43621-44G00	.BAR, PILLION FOOTREST LH	1	
30	43816-01H10	.PLATE, PILLION FOOTREST	1	
31	09208-08020	.PIN	1	
32	09440-05003	.SPRING	1	
33	02142-0516A	.SCREW	2	
34	06111-07004	.BALL	1	
35	08332-1106A	.E RING	1	
36	09106-08121	BOLT (8X30)	4	

FIG.38

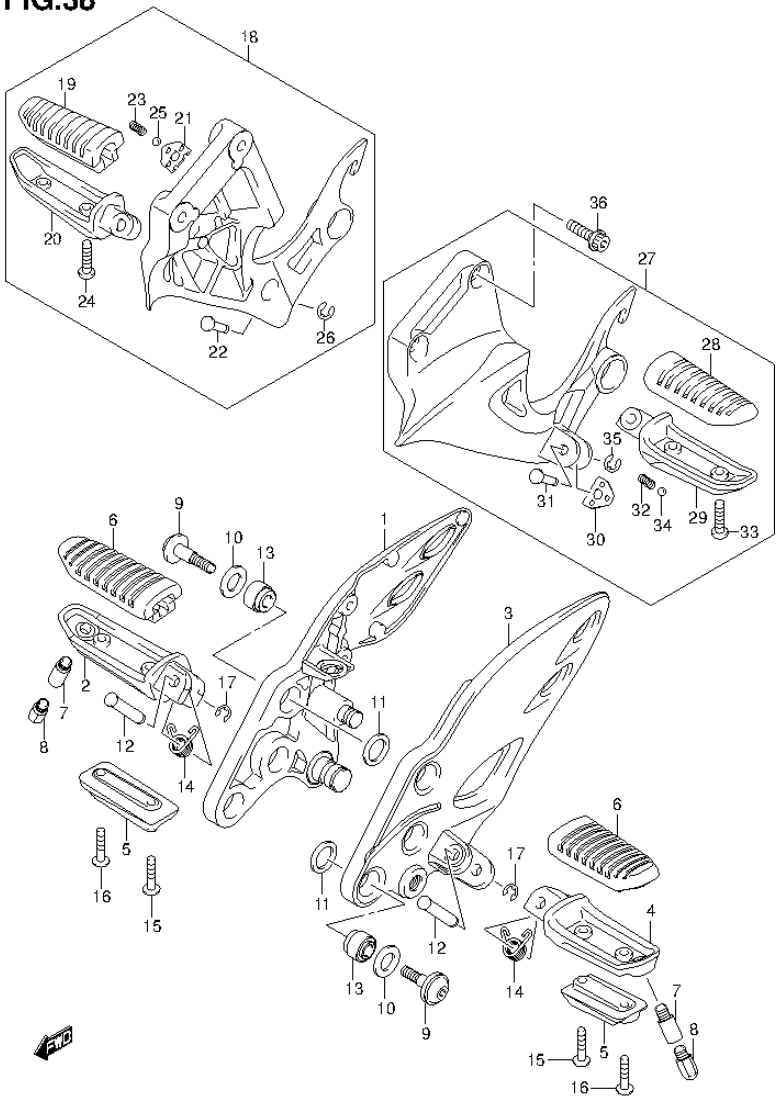

FIG.38 (1-E-5) FOOTREST

REF NO.	PART NO.	DESCRIPTION	Q'TY	REMARKS
27	43700-15H00	FOOTREST ASSY, PILLION LH	1	
28	43550-44G00	.RUBBER	1	
29	43621-44G00	.BAR, PILLION FOOTREST LH	1	
30	43816-01H10	.PLATE, PILLION FOOTREST	1	
31	09208-08020	.PIN	1	
32	09440-05003	.SPRING	1	
33	02142-0516A	.SCREW	2	
34	06111-07004	.BALL	1	
35	08332-1106A	.E RING	1	
36	09106-08121	BOLT (8X30)	4	

FIG.39

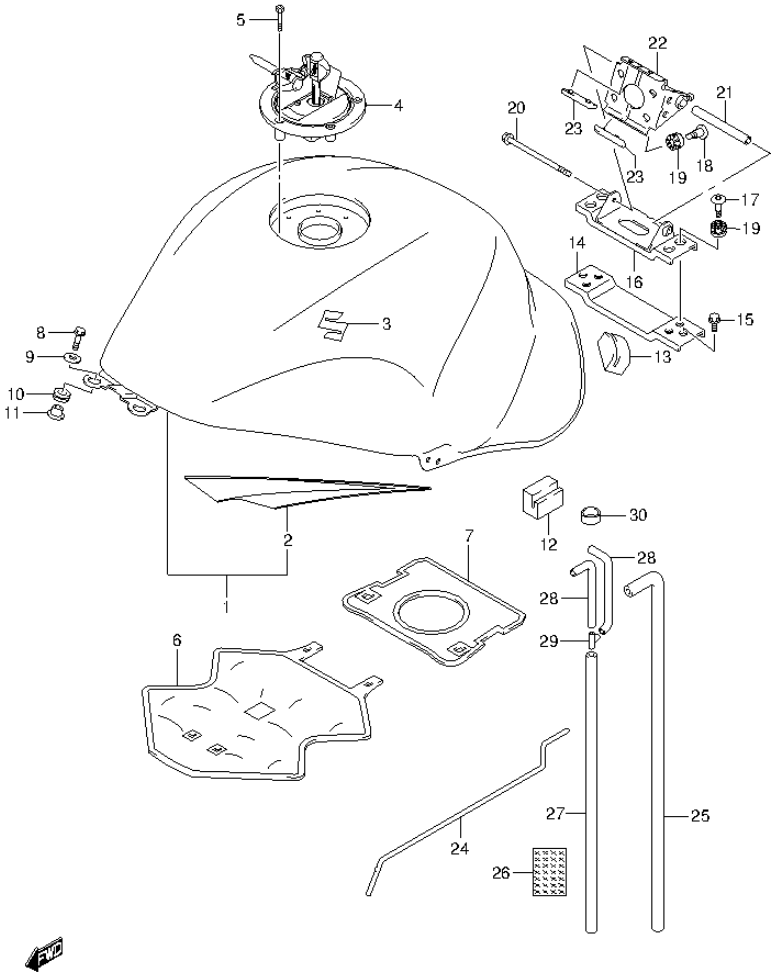

FIG.39 (1-E-6) FUEL TANK (GSX1300RAL4 E99)

REF NO.	PART NO.	DESCRIPTION	Q'TY	REMARKS
1-1	44100-15H90-6UX	TANK ASSY, FUEL (BLACK)	1	FOR AA3
1-2	44100-15H90-YVZ	TANK ASSY, FUEL (RED)	1	FOR AGS
1-3	44100-15H90-YKY	TANK ASSY, FUEL (BLUE)	1	FOR AJP
2-1	68110-15H20-AV8	.TAPE SET	1	FOR 6UX
2-2	68110-15H20-AV9	.TAPE SET	1	FOR YVZ
2-3	68110-15H20-AWF	.TAPE SET	1	FOR YKY
3	68111-47HA0	EMBLEM, "S"	2	
4	44200-16850	CAP SET, FUEL TANK	1	
5	09106-05017	BOLT (5X20)	3	
6	44191-15H00	SHIELD, FUEL TANK HEAT NO.1	1	
7	44191-15H10	SHIELD, FUEL TANK HEAT NO.2	1	
8	09139-06029	SCREW (6X25)	2	
9	09160-06012	WASHER (6.5X22X1.6)	2	
10	44511-16G00	CUSHION	2	
11	44512-16G00	SPACER	2	
12	44541-24F00	CUSHION, SIDE	2	
13	44543-15H00	CUSHION, REAR	2	
14	44555-15H00	BRACKET, FUEL TANK REAR NO.3	1	
15	01550-0816A	BOLT	2	
16	44550-15H01	BRACKET, FUEL TANK REAR NO.2	1	
17	09139-06191	SCREW (6X22)	4	
18	09139-06191	SCREW (6X22)	4	
19	09320-08071	CUSHION	8	
20	07120-0695B	BOLT	1	
21	44561-18G00	SPACER, FUEL TANK REAR	1	
22	44530-15H01	BRACKET, FUEL TANK REAR NO.1	1	
23	45149-44G00	CUSHION, BRACKET	2	
24	44574-35F00	STAY	1	OPT
25	44423-15H00	HOSE, DRAIN	1	

FIG.39

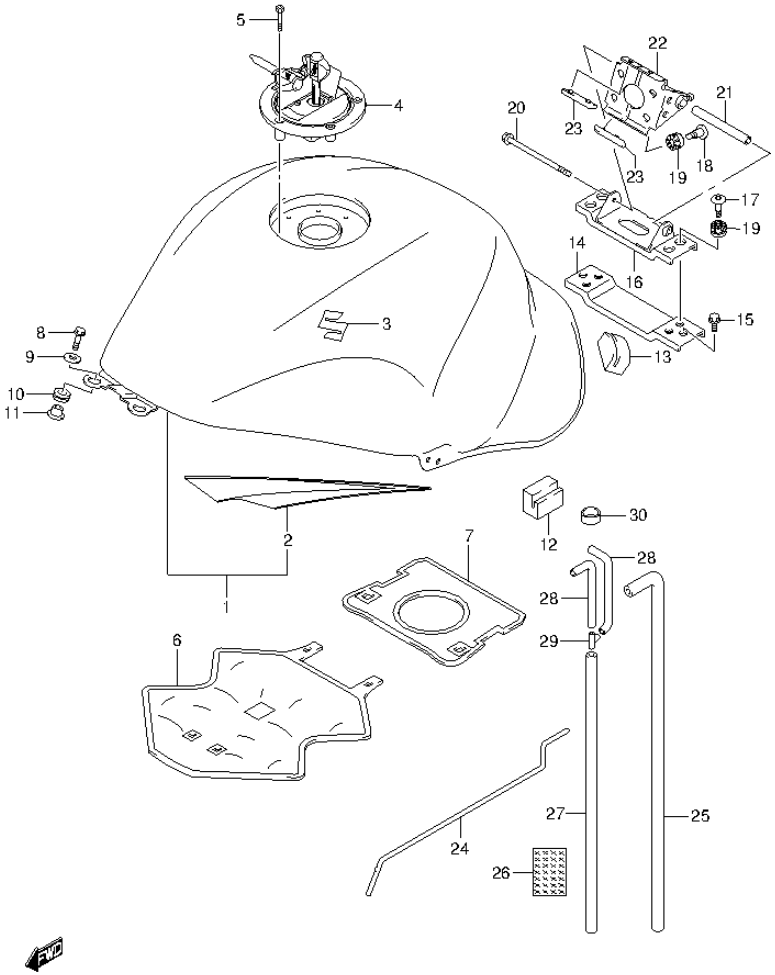

FIG.39 (1-E-7) FUEL TANK (GSX1300RAL4 E99)

REF NO.	PART NO.	DESCRIPTION	Q'TY	REMARKS
26	44427-15H00	SHIELD, DRAIN HOSE HEAT	1	
27	44424-15H00	HOSE, BREATHER	1	
28	44424-15H10	HOSE, BREATHER NO.2	2	
29	09367-06007	3 WAY	1	
30	09352-12163-600	HOSE (12X16X600)	1	L:600->10

COLOR : AA3=YLF(GRAY),YVB(BLACK)
AGS=YVZ(RED),YWW(WHITE)
AJP=YKY(BLUE),YWW(WHITE)

FIG.40

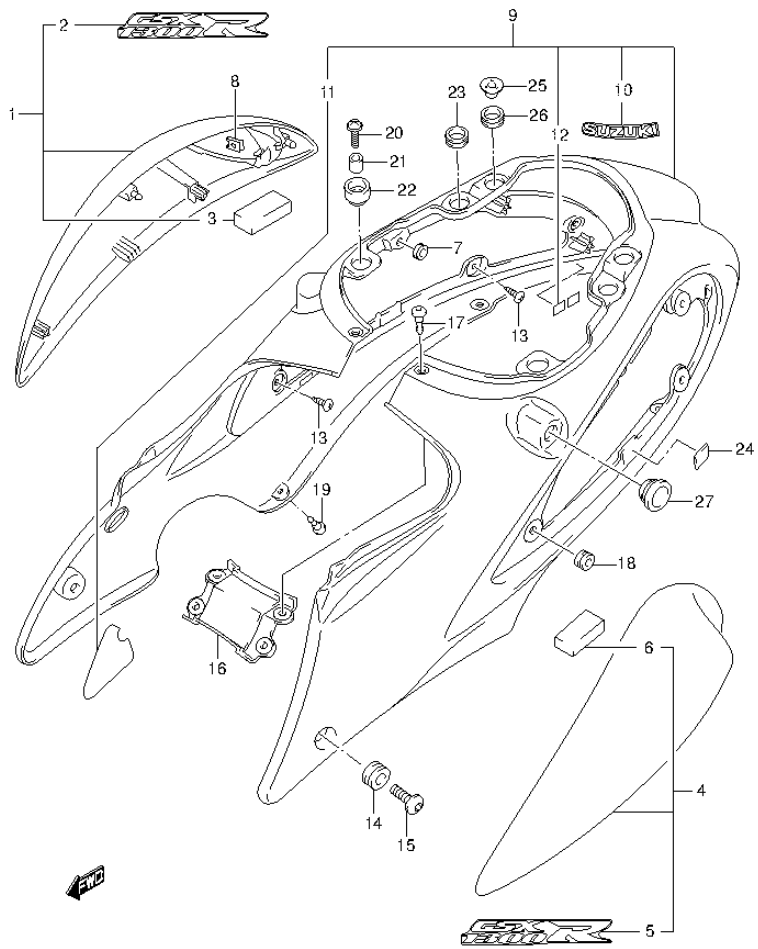

FIG.40 (1-E-8) FRAME COVER

REF NO.	PART NO.	DESCRIPTION	Q'TY	REMARKS
1-1	47110-15H01-6UX	COVER, FRAME RH (BLACK)	1	FOR AA3
1-2	47110-15H01-YVZ	COVER, FRAME RH (RED)	1	FOR AGS
1-3	47110-15H01-YKY	COVER, FRAME RH (BLUE)	1	FOR AJP
2-1	68131-15H00-AWG	.EMBLEM, FRAME COVER	1	FOR 6UX
2-2	68131-15H00-AWH	.EMBLEM, FRAME COVER	1	FOR YVZ
2-3	68131-15H00-AWJ	.EMBLEM, FRAME COVER	1	FOR YKY
3	47511-15H00	.CUSHION	2	
4-1	47210-15H01-6UX	COVER, FRAME LH (BLACK)	1	FOR AA3
4-2	47210-15H01-YVZ	COVER, FRAME LH (RED)	1	FOR AGS
4-3	47210-15H01-YKY	COVER, FRAME LH (BLUE)	1	FOR AJP
5-1	68131-15H00-AWG	.EMBLEM, FRAME COVER	1	FOR 6UX
5-2	68131-15H00-AWH	.EMBLEM, FRAME COVER	1	FOR YVZ
5-3	68131-15H00-AWJ	.EMBLEM, FRAME COVER	1	FOR YKY
6	47511-15H00	.CUSHION	2	
7	09320-06016	CUSHION	4	
8	09148-04034	NUT	2	
9-1	47310-15H20-YVB	COVER, FRAME CENTER (BLACK)	1	FOR AA3
9-2	47310-15H20-YVZ	COVER, FRAME CENTER (RED)	1	FOR AGS
9-3	47310-15H20-YKY	COVER, FRAME CENTER (BLUE)	1	FOR AJP
10-1	68641-19F00-17U	.EMBLEM (GRAY)	1	FOR AA3
10-2	68641-19F00-YWW	.EMBLEM (BLACK)	1	FOR AGS,AJP
11	47312-15H00	.TAPE, CENTER	2	
12	45516-01H00	.CUSHION	4	
13	09136-05062	SCREW (5X15)	6	
14	09320-09016	CUSHION	2	
15	09139-06190	SCREW (6X20)	2	
16-1	47411-15H00-YVB	LID, CENTER (BLACK)	1	FOR AA3
16-2	47411-15H00-YVZ	LID, CENTER (RED)	1	FOR AGS
16-3	47411-15H00-YKY	LID, CENTER (BLUE)	1	FOR AJP
17	09409-06314-5PK	CLIP (BLACK)	4	
18	09320-09016	CUSHION	6	
19	09409-06329	CLIP	4	
20	09136-06105	SCREW (6X20)	2	
21	09180-06288	SPACER (6.5X10X11)	2	

FIG.40

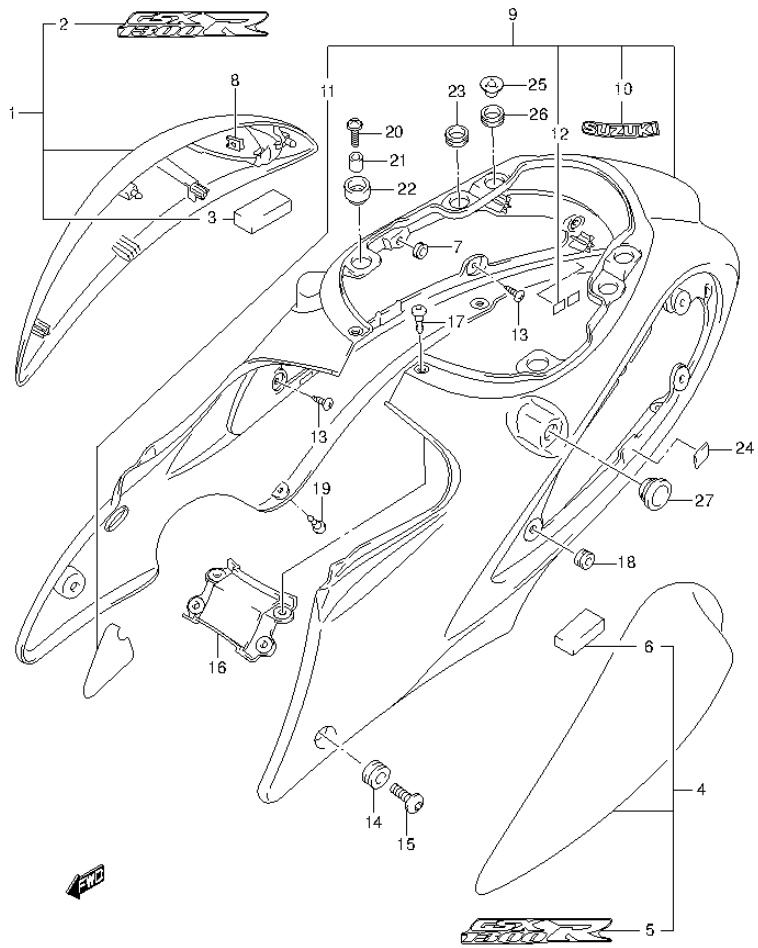

FIG.40 (1-E-9) FRAME COVER

REF NO.	PART NO.	DESCRIPTION	Q'TY	REMARKS
22	47115-16G00	CUSHION, UPPER FRONT	2	
23	47191-24F00	CUSHION, UPPER CENTER	2	
24	33651-37000	CUSHION, LOWER	2	
25	47190-24F21	WASHER, UPPER REAR	2	
26	47191-24F30	CUSHION, UPPER REAR	2	
27	47191-24F20	SPACER, SIDE CENTER	2	

COLOR : AA3=YLF(GRAY),YVB(BLACK)
AGS=YVZ(RED),YWW(WHITE)
AJP=YKY(BLUE),YWW(WHITE)

FIG.41

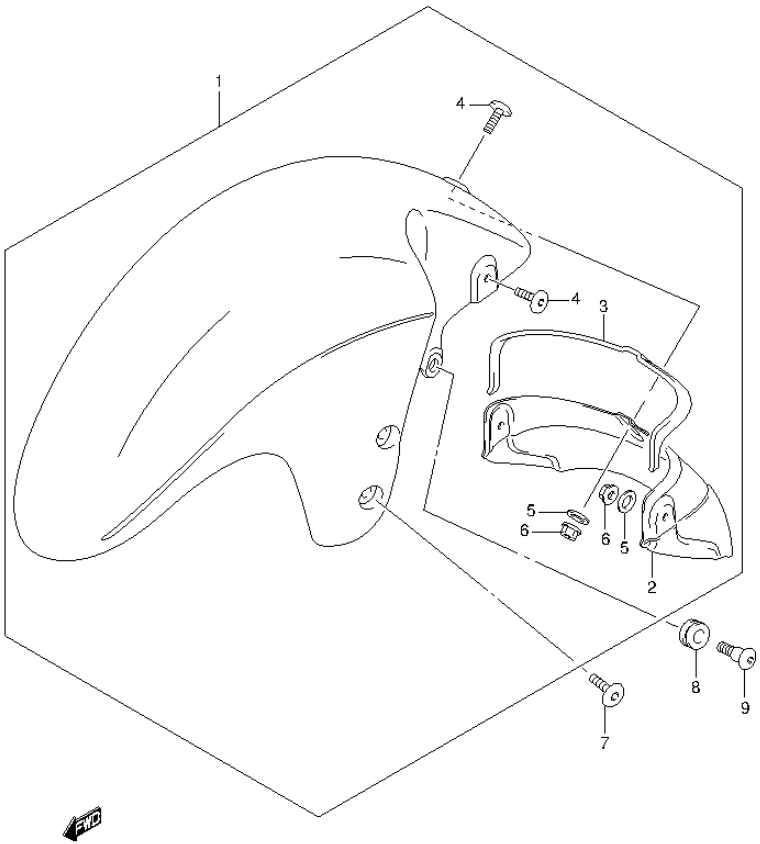

FIG.41 (1-E-10) FRONT FENDER (GSX1300RAL4 E99)

REF NO.	PART NO.	DESCRIPTION	Q'TY	REMARKS
1-1	53100-15H00-YVB	FENDER, FRONT (BLACK)	1	FOR AA3
1-2	53100-15H00-YVZ	FENDER, FRONT (RED)	1	FOR AGS
1-3	53100-15H00-YKY	FENDER, FRONT (BLUE)	1	FOR AJP
2	53331-15H00	.MUDGUARD, FRONT FENDER	1	
3	94424-05H00	.CUSHION	1	
4	09139-06129	.SCREW (6X16)	3	
5	09160-06129	.WASHER (6.5X16X1)	3	
6	08319-3106A	.NUT	3	
7	09139-06131	SCREW (6X16)	4	
8	09320-09016	CUSHION	2	
9	09139-06146	SCREW (6X16)	2	

COLOR : AA3=YLF(GRAY),YVB(BLACK)
AGS=YVZ(RED),YWW(WHITE)
AJP=YKY(BLUE),YWW(WHITE)

FIG.42

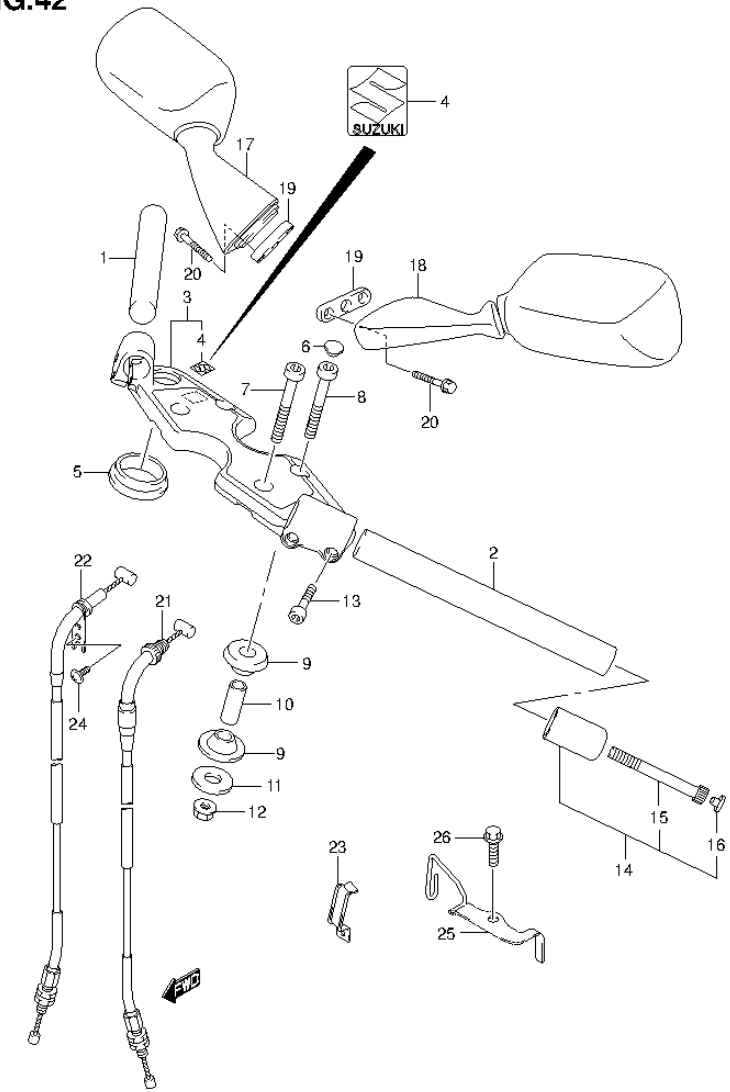

FIG.42 (1-E-11) HANDLEBAR (GSX1300RAL4 E99)

REF NO.	PART NO.	DESCRIPTION	Q'TY	REMARKS
1	56111-15H00	HANDLEBAR, RH	1	
2	56151-15H00	HANDLEBAR, LH	1	
3	56210-15H10	HOLDER, HANDLE	1	
4	68281-47HA0	.EMBLEM	1	
5	56247-24F00	CUSHION, HANDLE HOLDER	2	
6	56246-24F00	CAP, BOLT	4	
7	07130-1065B	BOLT	2	
8	07130-1060A	BOLT	2	
9	56240-01D00	CUSHION	8	
10	56243-01D00	SPACER	4	
11	09160-10094	WASHER (10.5X30X3.2)	4	
12	08319-3110A	NUT	4	
13	09106-06090	BOLT (6X25)	4	
14	56200-15830	BALANCER SET, HANDLEBAR	2	
15	07130-0660B	.BOLT	2	
16	09250-05009	.CAP (OD:10)	2	
17	56500-24F20	MIRROR ASSY, REAR VIEW RH	1	
18	56600-24F20	MIRROR ASSY, REAR VIEW LH	1	
19	94576-24F00	CUSHION	2	
20	01547-0630B	BOLT	4	
21	58300-15H20	CABLE ASSY, THROTTLE NO.1	1	
22	58300-15H30	CABLE ASSY, THROTTLE NO.2	1	
23	58623-24F10	GUIDE, CABLE	1	
24	09125-05042	SCREW (5X10)	1	
25	58620-15H00	GUIDE, CABLE	1	
26	01547-0612A	BOLT	1	

FIG.43

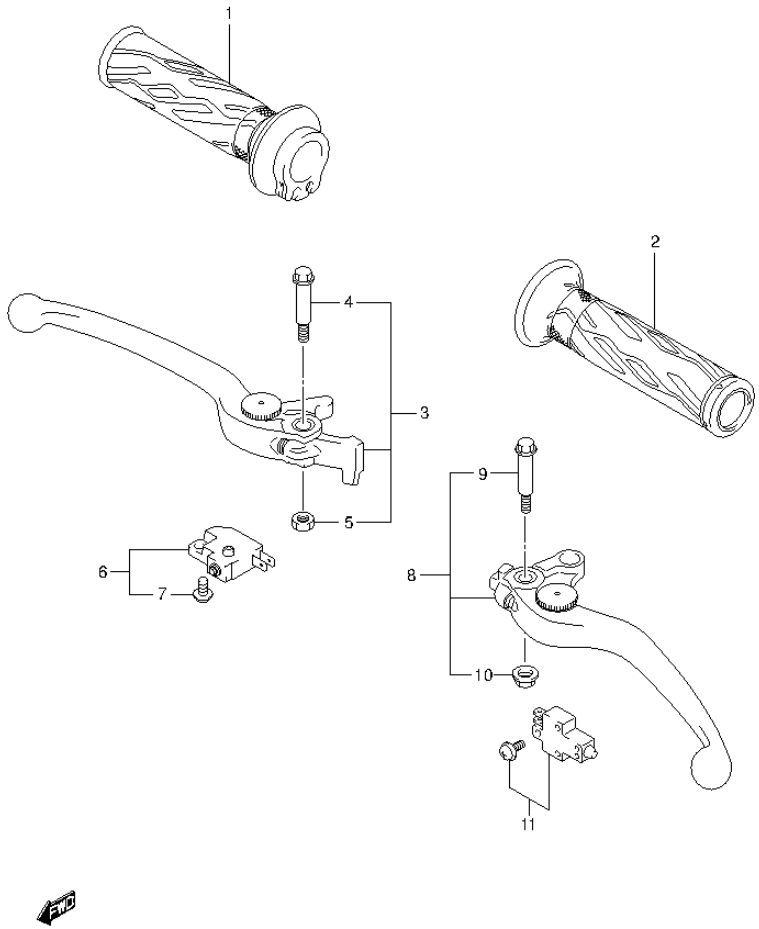

FIG.43 (1-E-12) HANDLE LEVER

REF NO.	PART NO.	DESCRIPTION	Q'TY	REMARKS
1	57110-21H01	GRIP, THROTTLE	1	
2	57211-21H00	GRIP LH	1	
3	57300-14G22	LEVER ASSY, BRAKE	1	
4	57431-17H02	.BOLT, LEVER PIVOT	1	
5	08319-2106A	.NUT	1	
6	57460-14J01	SWITCH ASSY, FRONT BRAKE	1	
7	57465-17C00	.SCREW	1	
8	57500-24F30	LEVER ASSY, CLUTCH	1	
9	57431-17H02	.BOLT, LEVER PIVOT	1	
10	08316-1006B	.NUT	1	
11	57560-02FA0	SWITCH ASSY, CLUTCH	1	

FIG.44

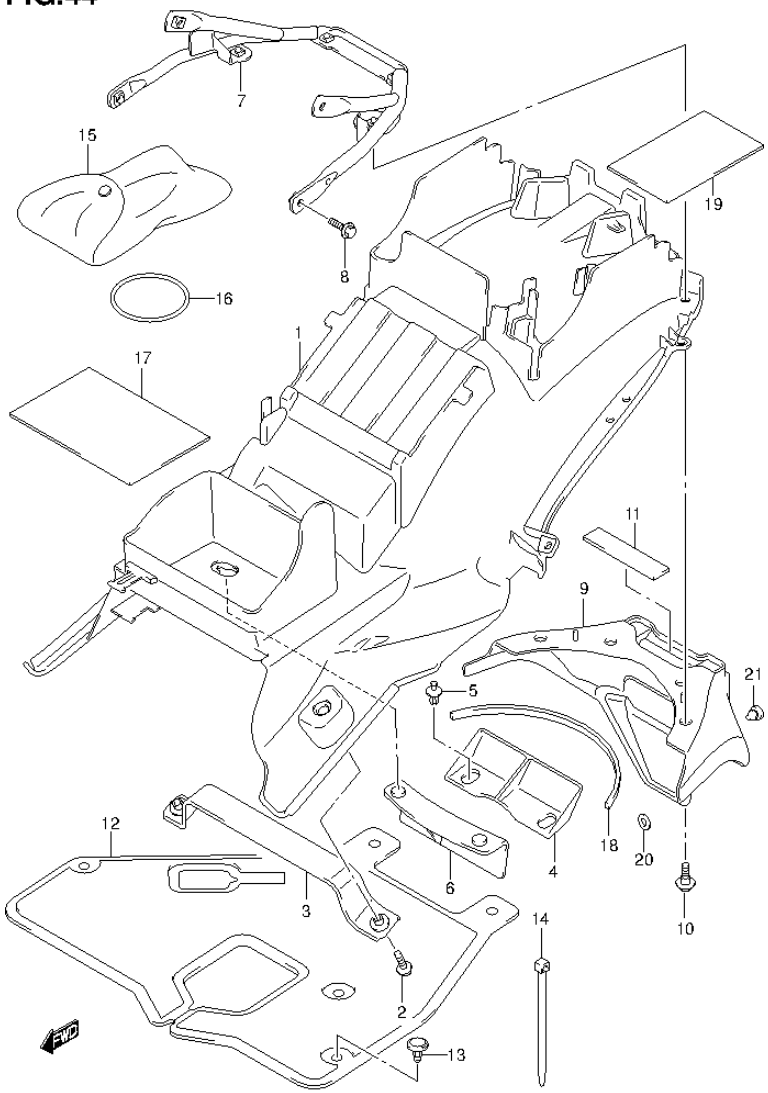

FIG.44 (1-E-13) REAR FENDER (GSX1300RAL4 E99)

REF NO.	PART NO.	DESCRIPTION	Q'TY	REMARKS
1	63111-15H00-291	FENDER, REAR FRONT (BLACK)	1	
2	01550-0616A	BOLT	2	
3	63130-15H00	BRACKET, FRONT	1	
4	63411-24F00	MUDGUARD, REAR	1	
5	09409-07333	CLIP	2	
6	63421-24F00	MUDGUARD, REAR UPPER	1	
7	63120-15H00	BRACKET, REAR FENDER	1	
8	01550-0616A	BOLT	4	
9	63112-15H00-291	FENDER, REAR REAR (BLACK)	1	
10	09111-06099	BOLT (6X16)	4	
11	33652-49000	CUSHION	1	
12	47851-15H00	SHIELD, INNER	1	
13	94479-35F00	CLIP	1	
14	09407-10403	CLAMP (L:95)	1	
15	09800-21056	TOOL ASSY	1	
16	09280-57003	O RING (D:3.5,ID:56.5)	1	
17	63113-15H00	CUSHION, FENDER	1	
18	63192-16GA0	CUSHION, REAR FENDER REAR NO.2	1	
19	63114-15H00	CUSHION, TOOL BAG	1	
20	08322-0106B	WASHER	2	
21	09250-06012	PLUG (OD:10)	4	

FIG.45

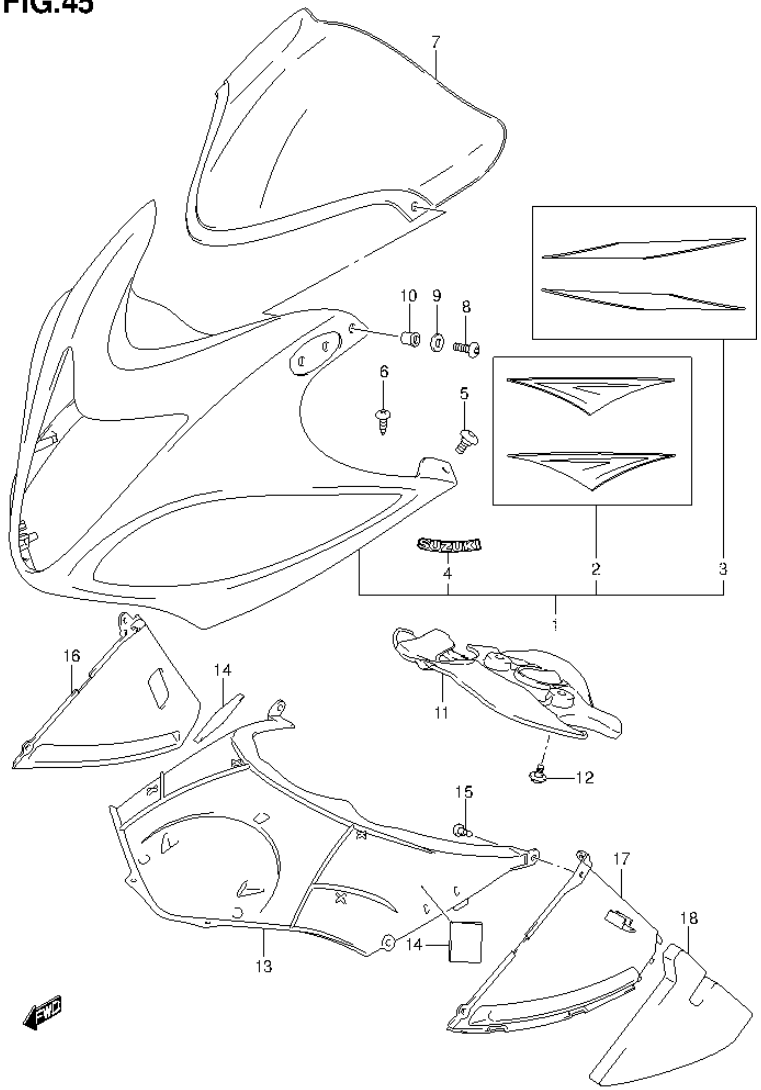

FIG.45 (1-E-14) COWLING BODY

REF NO.	PART NO.	DESCRIPTION	Q'TY	REMARKS
1-1	94401-15H40-6UX	BODY, COWLING (BLACK)	1	FOR AA3
1-2	94401-15H40-YVZ	BODY, COWLING (RED)	1	FOR AGS
1-3	94401-15H40-YKY	BODY, COWLING (BLUE)	1	FOR AJP
2-1	68270-15H40-AV8	.TAPE SET, BODY COWLING UPPER	1	FOR 6UX
2-2	68270-15H40-AV9	.TAPE SET, BODY COWLING UPPER	1	FOR YVZ
2-3	68270-15H40-AWF	.TAPE SET, BODY COWLING UPPER	1	FOR YKY
3-1	68270-15H50-AA3	.TAPE SET, BODY COWLING LOWER (GRAY/ BALCK)	1	
3-2	68270-15H50-AGS	.TAPE SET, BODY COWLING LOWER (RED/WHITE)	1	
3-3	68270-15H50-AJP	.TAPE SET, BODY COWLING LOWER (BLUE/WHITE)	1	
4-1	68281-24F10-17U	.EMBLEM (GRAY)	1	FOR AA3
4-2	68281-24F10-YWW	.EMBLEM (WHITE)	1	FOR AGS,AJP
5	09139-05077	SCREW (5X16)	2	
6	09132-05053	SCREW (5X16)	2	
7	94611-15H00	WINDSCREEN	1	
8	09139-05025	SCREW (5X14)	2	
9	08322-0105B	WASHER	2	
10	09159-05019	NUT	2	
11	94458-15H10	COVER, LOWER BRACKET	1	
12	09111-06107	BOLT (6X12)	2	
13	94419-15H01	COVER, BODY COWL	1	
14	36930-60A10	CUSHION, COVER	2	
15	09409-06314-5PK	CLIP (BLACK)	6	
16	94461-15H00	COWL, INNER RH	1	
17	94462-15H00	COWL, INNER LH	1	
18	94463-15H00	CUSHION, LH	1	

COLOR : AA3=YLF(GRAY),YVB(BLACK)
AGS=YVZ(RED),YWW(WHITE)
AJP=YKY(BLUE),YWW(WHITE)

FIG.46

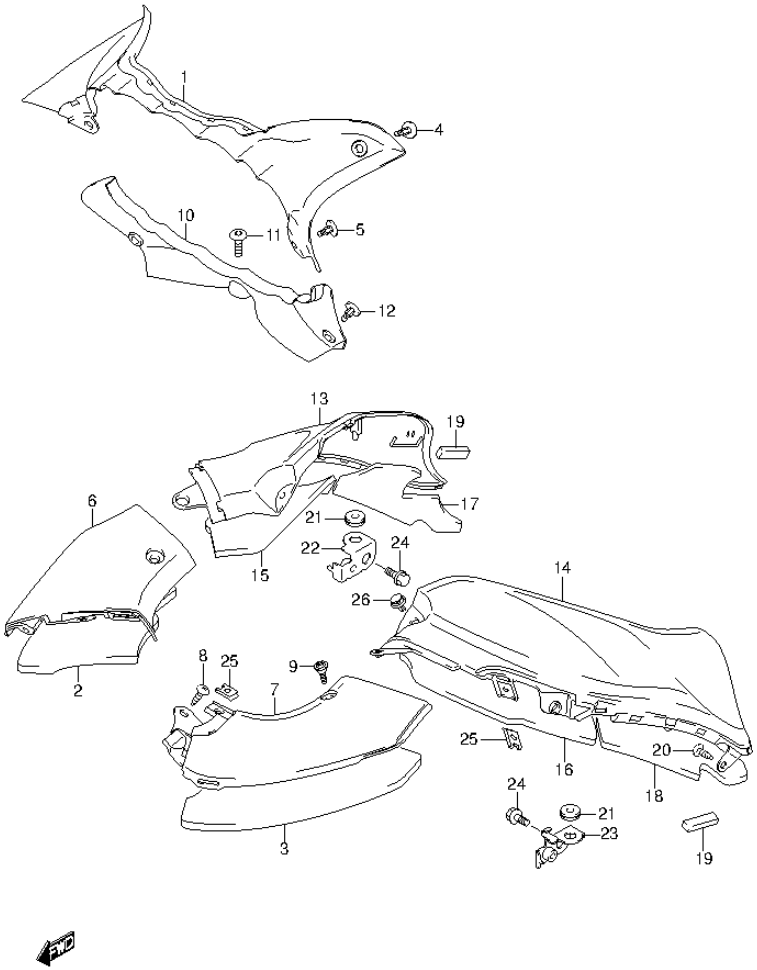

FIG.46 (1-E-15) METER PANEL

REF NO.	PART NO.	DESCRIPTION	Q'TY	REMARKS
1	94424-15H00	PANEL, METER UPPER	1	
2	94643-15H00	CUSHION, RH	1	
3	94644-15H00	CUSHION, LH	1	
4	09409-06314-5PK	CLIP (BLACK)	2	
5	09409-07333	CLIP	2	
6	94641-15H00	PANEL, METER RH	1	
7	94651-15H00	PANEL, METER LH	1	
8	03241-1516B	SCREW	2	
9	09139-05504	SCREW (5X16)	2	
10	94425-15H00	PANEL, METER REAR	1	
11	09139-05503	SCREW (5X13)	1	
12	09409-08327	CLIP	2	
13	94621-15H00	PANEL, SIDE RH	1	
14	94631-15H00	PANEL, SIDE LH	1	
15	94622-15H00	CUSHION, FRONT RH	1	
16	94632-15H00	CUSHION, FRONT LH	1	
17	94623-15H00	CUSHION, REAR RH	1	
18	94633-15H00	CUSHION, REAR LH	1	
19	33652-02H00	CUSHION	2	
20	09132-05053	SCREW (5X16)	6	
21	47191-06J00	CUSHION	2	
22	94520-24F10	BRACKET RH	1	
23	94530-24F10	BRACKET LH	1	
24	01550-0620B	BOLT	2	
25	94484-24F00	NUT	2	
26	09409-07332	CLIP	2	

FIG.47

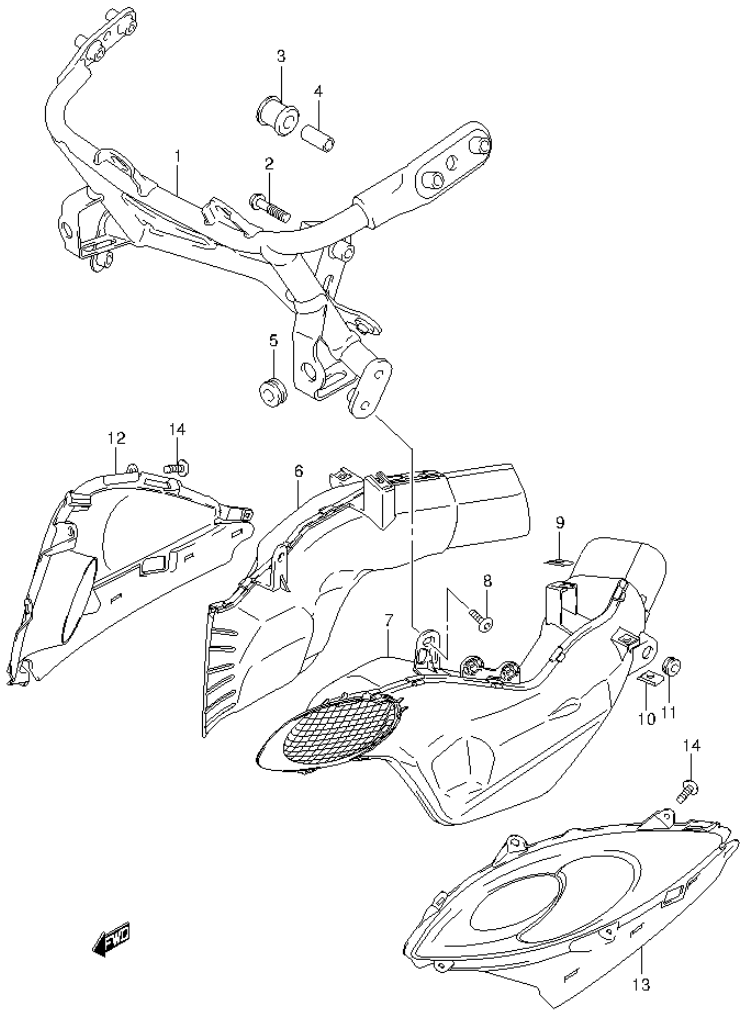

FIG.47 (1-F-2) AIR INTAKE PIPE

REF NO.	PART NO.	DESCRIPTION	Q'TY	REMARKS
1	94510-15H00	BRACE, COWLING	1	
2	09103-08367	BOLT (8X40)	2	
3	94541-41C00	CUSHION, UPPER	1	
4	09180-08215	SPACER (8.6X12.2X26.5)	1	
5	09320-08028	CUSHION	2	
6	94420-15H01	PIPE, INTAKE RH	1	
7	94430-15H01	PIPE, INTAKE LH	1	
8	94423-15H00	SCREW	2	
9	94484-24F00	NUT, METER PANEL	2	
10	09148-05038	NUT	2	
11	09320-08028	CUSHION	2	
12-1	94671-15H00-YVB	COVER, INTAKE RH (BLACK)	1	FOR AA3
12-2	94671-15H00-YVZ	COVER, INTAKE RH (RED)	1	FOR AGS
12-3	94671-15H00-YKY	COVER, INTAKE RH (BLUE)	1	FOR AJP
13-1	94681-15H00-YVB	COVER, INTAKE LH (BLACK)	1	FOR AA3
13-2	94681-15H00-YVZ	COVER, INTAKE LH (RED)	1	FOR AGS
13-3	94681-15H00-YKY	COVER, INTAKE LH (BLUE)	1	FOR AJP
14	09132-05053	SCREW (5X16)	8	

COLOR : AA3=YLF(GRAY),YVB(BLACK)
AGS=YVZ(RED),YWW(WHITE)
AJP=YKY(BLUE),YWW(WHITE)

FIG.48

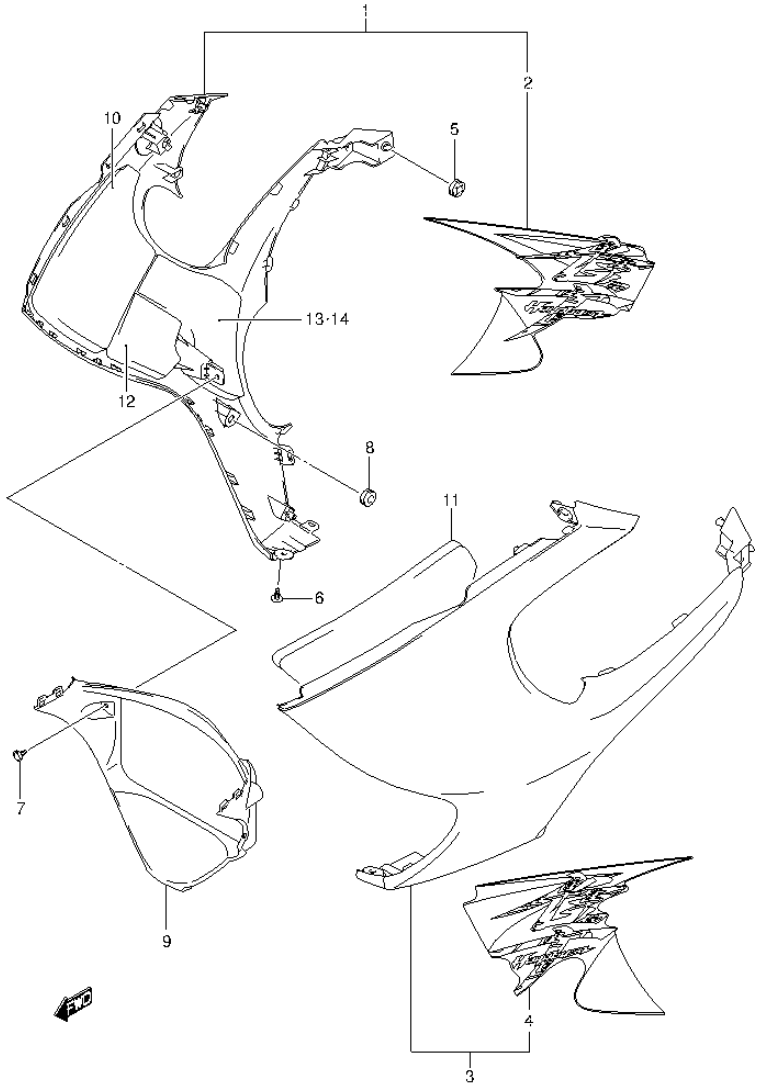

FIG.48 (1-F-3) SIDE COWLING

REF NO.	PART NO.	DESCRIPTION	Q'TY	REMARKS
1-1	94450-15H50-YLF	COWLING, SIDE RH (GRAY)	1	FOR AA3
1-2	94450-15H50-YWW	COWLING, SIDE RH (WHITE)	1	FOR AGS
1-3	94450-15H50-AHX	COWLING, SIDE RH (WHITE)	1	FOR AJP
2-1	68685-15H40-AWK	.TAPE, SIDE COWLING RH	1	FOR YLF
2-2	68685-15H40-AWL	.TAPE, SIDE COWLING RH	1	FOR YWW
2-3	68685-15H40-AWM	.TAPE, SIDE COWLING RH	1	FOR AHX
3-1	94460-15H50-YLF	COWLING, SIDE LH (GRAY)	1	FOR AA3
3-2	94460-15H50-YWW	COWLING, SIDE LH (WHITE)	1	FOR AGS
3-3	94460-15H50-AHX	COWLING, SIDE LH (WHITE)	1	FOR AJP
4-1	68695-15H40-AWK	.TAPE, SIDE COWLING LH	1	FOR YLF
4-2	68695-15H40-AWL	.TAPE, SIDE COWLING LH	1	FOR YWW
4-3	68695-15H40-AWM	.TAPE, SIDE COWLING LH	1	FOR AHX
5	09320-08028	CUSHION	2	
6	94479-35F00	CLIP	2	
7	94479-35F00	CLIP	2	
8	09321-10018	CUSHION	2	
9	94498-15H00	COWLING, UNDER CENTER	1	
10	94476-15H00	CUSHION, SIDE UPPER RH	1	
11	94486-15H00	CUSHION, SIDE UPPER LH	1	
12	94476-15H10	CUSHION, SIDE LOWER	2	
13	94474-15H00	SHIELD, SIDE RH	1	
14	94484-15H00	SHIELD, SIDE LH	1	

FIG.49

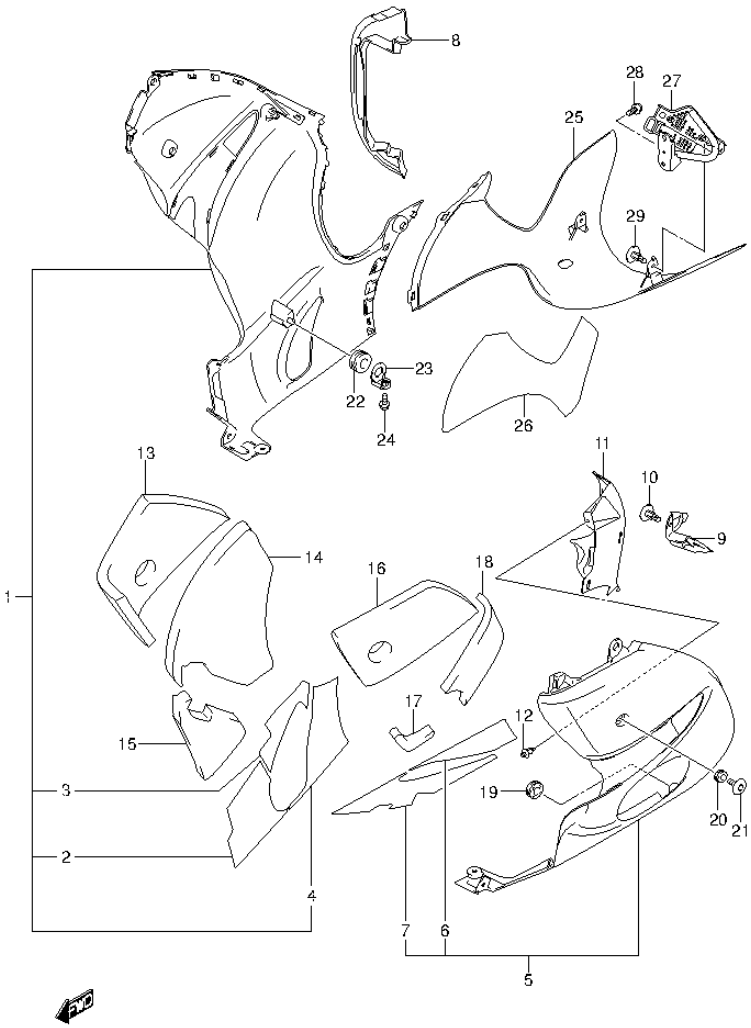

FIG.49 (1-F-4) UNDER COWLING

REF NO.	PART NO.	DESCRIPTION	Q'TY	REMARKS
1-1	94470-15H20-YVB	COWLING, UNDER RH (BLACK)	1	FOR AA3
1-2	94470-15H20-YVZ	COWLING, UNDER RH (RED)	1	FOR AGS
1-3	94470-15H20-YKY	COWLING, UNDER RH (BLUE)	1	FOR AJP
2	94472-15H00	.SHIELD, HEAT RH NO.1	1	
3	94472-15H20	.SHIELD, HEAT RH NO.3	1	
4	94472-15H10	.SHIELD, HEAT RH NO.2	1	
5-1	94480-15H20-YVB	COWLING, UNDER LH (BLACK)	1	FOR AA3
5-2	94480-15H20-YVZ	COWLING, UNDER LH (RED)	1	FOR AGS
5-3	94480-15H20-YKY	COWLING, UNDER LH (BLUE)	1	FOR AJP
6	94482-15H00	.SHIELD, HEAT LH NO.1	1	
7	94482-15H10	.SHIELD, HEAT LH NO.2	1	
8	94475-15H00	PROTECTOR, RH	1	
9	94485-15H00	PROTECTOR, LH	1	
10	94479-35F00	CLIP, LH	1	
11	94489-15H00	COVER, UNDER LH	1	
12	09409-06314-5PK	CLIP (BLACK)	1	LH
13	94478-15H00	CUSHION, UNDER COWL RH NO.1	1	
14	94478-15H10	CUSHION, UNDER COWL RH NO.2	1	
15	94478-15H20	CUSHION, UNDER COWL RH NO.3	1	
16	94488-15H00	CUSHION, UNDER COWL LH NO.1	1	
17	94488-15H10	CUSHION, UNDER COWL LH NO.2	1	
18	94488-15H20	CUSHION, UNDER COWL LH NO.3	1	
19	94479-15H00	CUSHION, LH	1	
20	09320-09016	CUSHION	3	
21	09139-06190	SCREW (6X20)	4	
22	09320-08028	CUSHION	2	
23	94560-15H00	PLATE, UNDER COWL	2	
24	01550-0612B	BOLT	2	

FIG.49

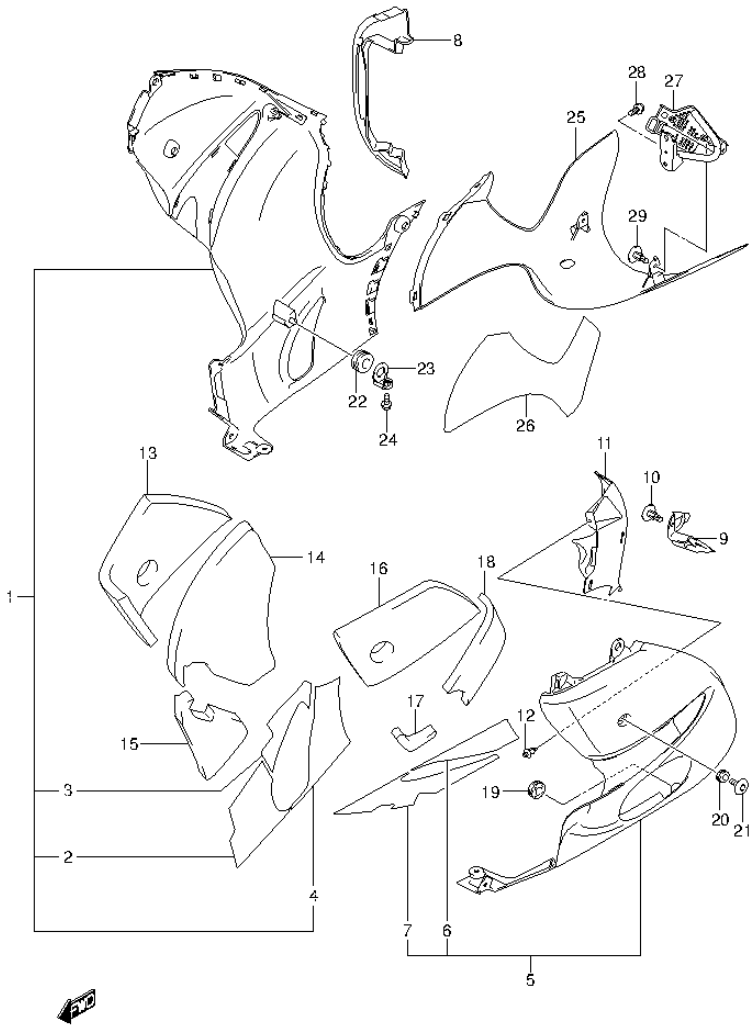

FIG.49 (1-F-5) UNDER COWLING

REF NO.	PART NO.	DESCRIPTION	Q'TY	REMARKS
25-1	94661-15H00-YVB	COWLING, UNDER REAR (BLACK)	1	FOR AA3
25-2	94661-15H00-YVZ	COWLING, UNDER REAR (RED)	1	FOR AGS
25-3	94661-15H00-YKY	COWLING, UNDER REAR (BLUE)	1	FOR AJP
26	94667-15H00	SHIELD, HEAT	1	
27	94540-15H00	BRACKET, REAR COWLING	1	
28	01550-0816A	BOLT	2	
29	94479-35F00	CLIP	2	

FIG.50

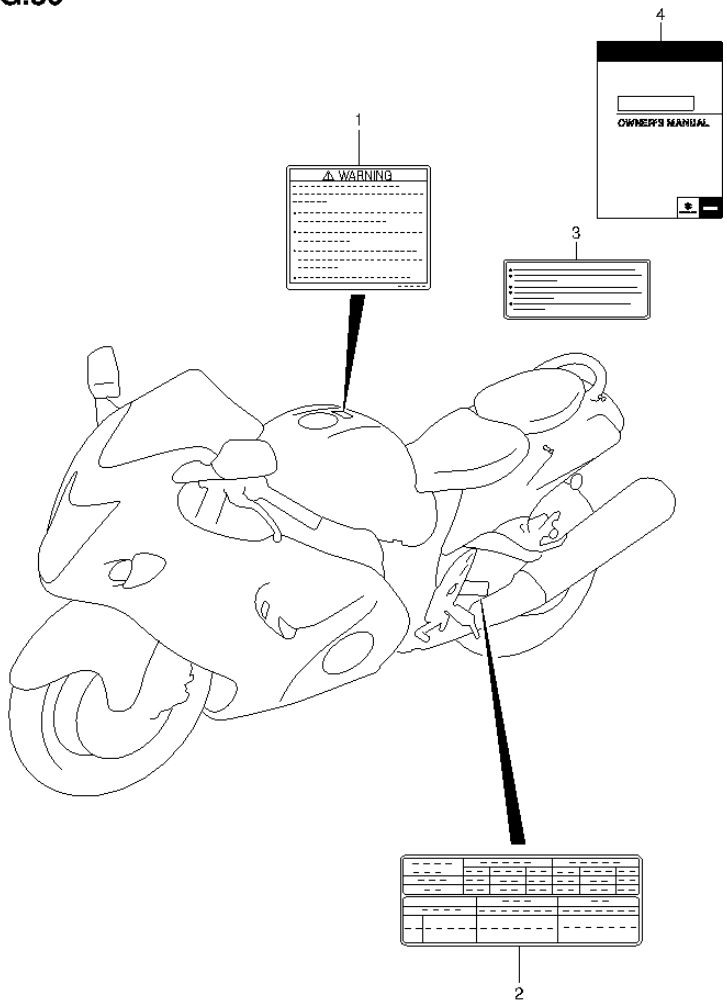

FIG.50 (1-F-6) LABEL (GSX1300RAL4 E99)

REF NO.	PART NO.	DESCRIPTION	Q'TY	REMARKS
1-1	68319-29F00	LABEL, WARNING (ENGLISH)	1	
1-2	68319-29FG0	LABEL, WARNING (KOREAN)	1	
1-3	68319-29F50	LABEL, WARNING (SPANISH)	1	
2-1	68332-15H10	LABEL, TIRE INFORMATION (ENGLISH)	1	
2-2	68332-15H20	LABEL, TIRE INFORMATION (KOREAN)	1	
2-3	68332-15H60	LABEL, TIRE INFORMATION (SPANISH)	1	
3-1	18803-45G00	LABEL, FUEL INFORMATION (SPANISH)	1	
3-2	18803-48G00	LABEL, FUEL INFORMATION (KOREAN)	1	
4-1	99011-15H56-01A	MANUAL, OWNER'S (ENGLISH)	1	
4-2	99011-15H56-068	MANUAL, OWNER'S (KOREAN)	1	
4-3	99011-15H56-029	MANUAL, OWNER'S (SPANISH)	1	

FIG.51

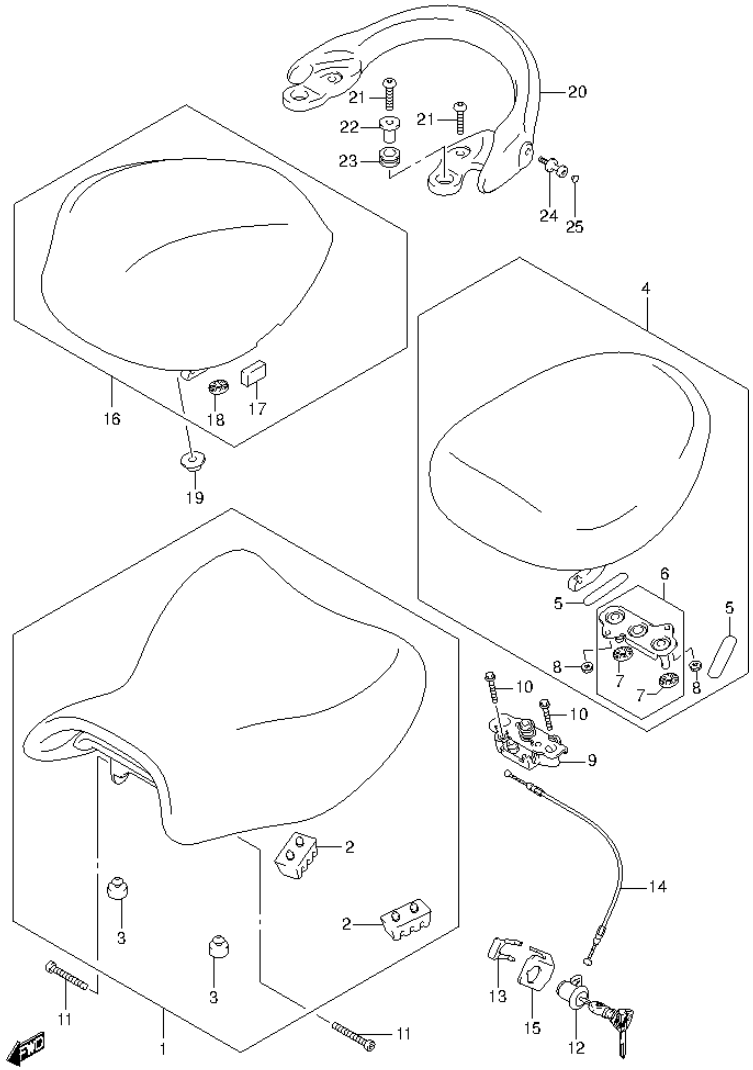

FIG.51 (1-F-7) SEAT

REF NO.	PART NO.	DESCRIPTION	Q'TY	REMARKS
1	45100-15H01-EJY	SEAT ASSY (BLACK)	1	
2	45149-45330	.CUSHION	2	
3	09321-10011	.CUSHION	2	
4	45300-15H10-U6H	SEAT ASSY, PILLION (BLACK)	1	
5	45149-15H00	.CUSHION	2	
6	45290-15H00	.STRIKER, SEAT LOCK	1	
7	45213-42F00	..CUSHION	2	
8	08316-1006A	.NUT	2	
9	45220-15H00	BRACKET, SEAT SUPPORT	1	
10	01547-0630A	BOLT	2	
11	45191-15H00	BOLT, SEAT FRONT	2	
12	95700-14F00	LOCK ASSY, SEAT	1	
13	45289-11F00	PLATE, SEAT LOCK	1	
14	45280-18G01	CABLE, SEAT LOCK	1	
15	45288-14F20	GUIDE, CABLE	1	
16-1	45550-15H01-YVB	BOX, SEAT TAIL (BLACK)	1	
16-2	45550-15H01-YVZ	BOX, SEAT TAIL (RED)	1	
16-3	45550-15H01-YKY	BOX, SEAT TAIL (BLUE)	1	
17	45553-15H00	.CUSHION	2	
18	45213-42F00	.CUSHION	2	
19	47190-24F01	WASHER	2	
20-1	46211-15H00-YVB	HANDLE, PILLION RIDER (BLACK)	1	
20-2	46211-15H00-YVZ	HANDLE, PILLION RIDER (RED)	1	
20-3	46211-15H00-YKY	HANDLE, PILLION RIDER (BLUE)	1	
21	09106-08137	BOLT (8X33)	4	
22	47190-24F11	WASHER, PILLION RIDER HANDLE	2	
23	46217-24F00	CUSHION, PILLION RIDER HANDLE	2	
24	46212-24F11	HOOK, HANDLE	2	
25	09250-05009	CAP (OD:10)	2	

FIG.52

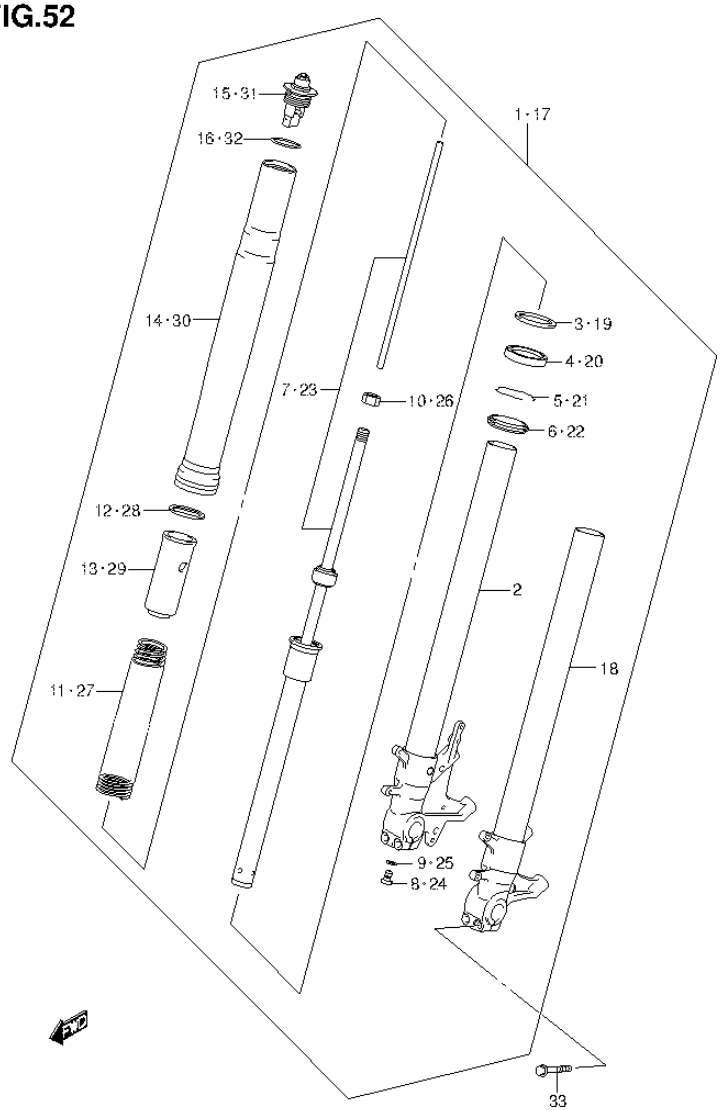

GSX1300RAL4_E99_052
FRONT FORK DAMPER

FIG.52 (1-F-8) FRONT FORK DAMPER

REF NO.	PART NO.	DESCRIPTION	Q'TY	REMARKS
1	51103-24F71	DAMPER ASSY, FRONT FORK RH	1	
2	51110-24F71	.TUBE, INNER RH	1	
3	51158-14200	.WASHER	1	
4	51153-41G00	.OIL SEAL	1	
5	51156-14200	.RING, STOPPER	1	
6	51173-41G00	.SEAL, DUST	1	
7	51146-24F50	.CYLINDER	1	
8	51147-24F50	.BOLT	1	
9	51148-41310	.GASKET	1	
10	51352-13A60	.NUT	1	
11	51171-24F50	.SPRING, FRONT	1	
12	51158-40F30	.GUIDE, SPRING	1	
13	51176-40F30	.SPACER, SPRING	1	
14	51130-24F50	.TUBE, OUTER	1	
15	51351-24F50	.CAP, FRONT FORK	1	
16	62278-14100	.O RING	1	
17	51104-24F70	DAMPER ASSY, FRONT FORK LH	1	
18	51120-24F70	.TUBE, INNER LH	1	
19	51158-14200	.WASHER	1	
20	51153-41G00	.OIL SEAL	1	
21	51156-14200	.RING, STOPPER	1	
22	51173-41G00	.SEAL, DUST	1	
23	51146-24F50	.CYLINDER	1	
24	51147-24F50	.BOLT	1	
25	51148-41310	.GASKET	1	
26	51352-13A60	.NUT	1	
27	51171-24F50	.SPRING, FRONT	1	
28	51158-40F30	.GUIDE, SPRING	1	
29	51176-40F30	.SPACER, SPRING	1	
30	51130-24F50	.TUBE, OUTER	1	
31	51351-24F50	.CAP, FRONT FORK	1	
32	62278-14100	.O RING	1	
33	51166-24F60	BOLT	4	

FIG.53

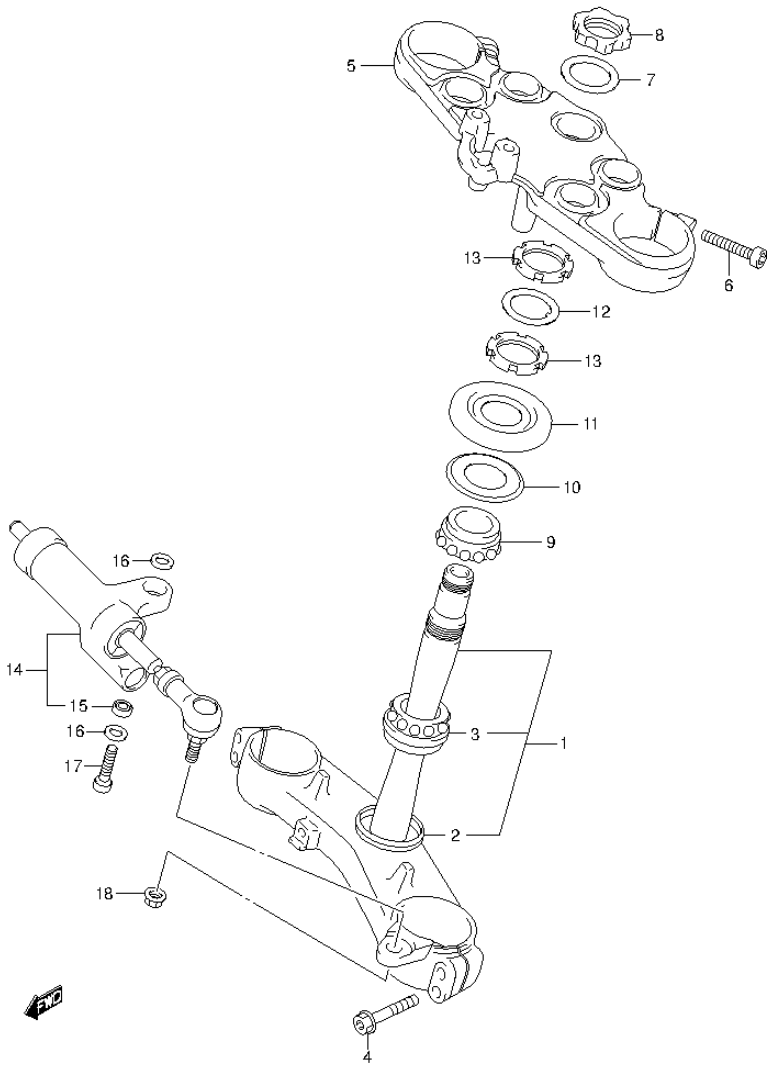

FIG.53 (1-F-9) BRACKET STEERING DAMPER

REF NO.	PART NO.	DESCRIPTION	Q'TY	REMARKS
1	51410-24F50	BRACKET, LOWER	1	
2	51644-12C00	.SEAL, LOWER	1	
3	09267-30010	.BEARING (30X55X17)	1	
4	51166-01D80	BOLT	4	
5	51311-24F50	BRACKET, UPPER	1	
6	51328-24F50	BOLT	2	
7	51356-24F50	WASHER	1	
8	51353-24F00	NUT	1	
9	09267-30010	BEARING (30X55X17)	1	
10	51644-12C00	SEAL, DUST UPPER (30.1X56X4)	1	
11	51643-41G00	COVER, STEERING UPPER	1	
12	51641-33E00	WASHER, STEM	1	
13	51631-33E00	NUT, STEM	2	
14	51750-15H00	DAMPER ASSY, STEERING	1	
15	09269-08003	.BEARING (8X17.5X11)	1	
16	64339-14101	SEAL, DUST	2	
17	07130-08307	BOLT	1	
18	08319-3108A	NUT	1	

FIG.54

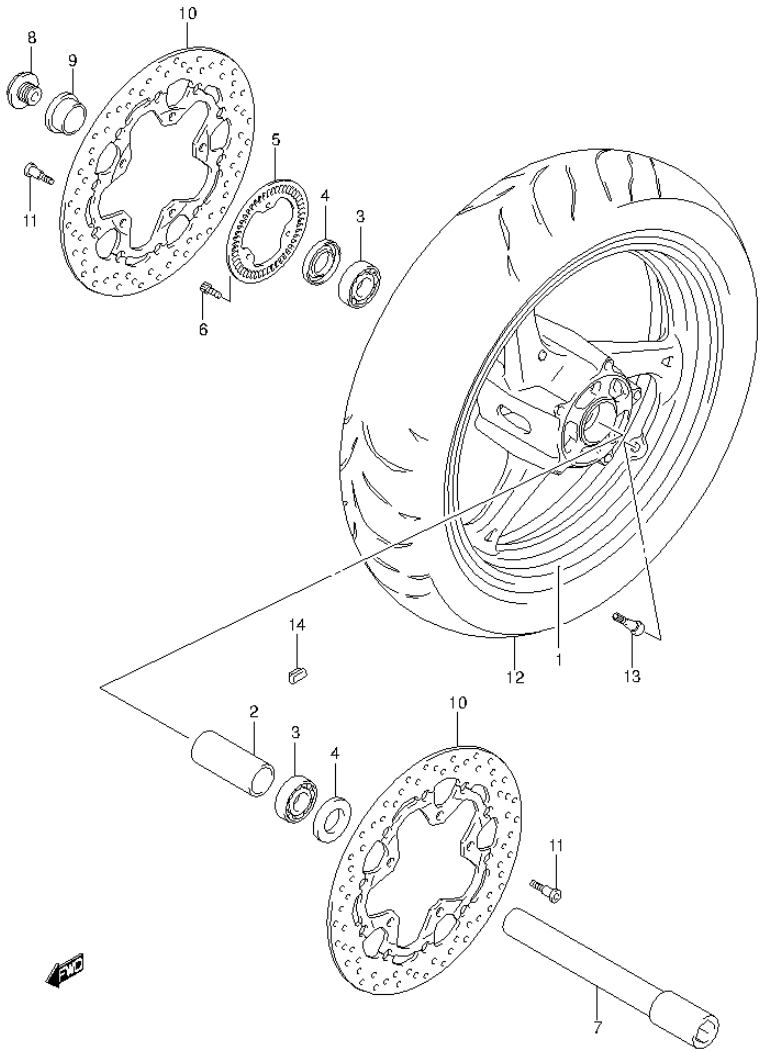

FIG.54 (1-F-10) FRONT WHEEL

REF NO.	PART NO.	DESCRIPTION	Q'TY	REMARKS
1	54111-15H10-019	WHEEL, FRONT (17M/CXMT3.50) (BLACK)	1	
2	54731-33E20	SPACER, HUB BEARING	1	
3	09262-25167	BEARING (25X52X15)	2	
4	09285-32004	OIL SEAL (32X52X7)	2	
5	54162-27G00	RING, SPEED SENSOR FR (50T)	1	
6	07130-0512A	BOLT	3	
7	54711-15H00	AXLE, FRONT	1	
8	54712-41G10	BOLT, FRONT AXLE	1	
9	54751-41G10	SPACER, FRONT AXLE, RH	1	
10	59210-15H10	DISC, FRONT BRAKE	2	
11	09106-08160	BOLT (8X21)	10	
12	55110-24F60	TIRE, FRONT (120/70ZR17M/C (58W))	1	
13	43130-24A00	VALVE ASSY, WHEEL RIM (TR412)	1	
14-1	55411-22H00	BALANCER, WHEEL NO.1 (10G)	AR	
14-2	55412-22H00	BALANCER, WHEEL NO.2 (20G)	AR	
14-3	55413-22H00	BALANCER, WHEEL NO.3 (30G)	AR	

FIG.55

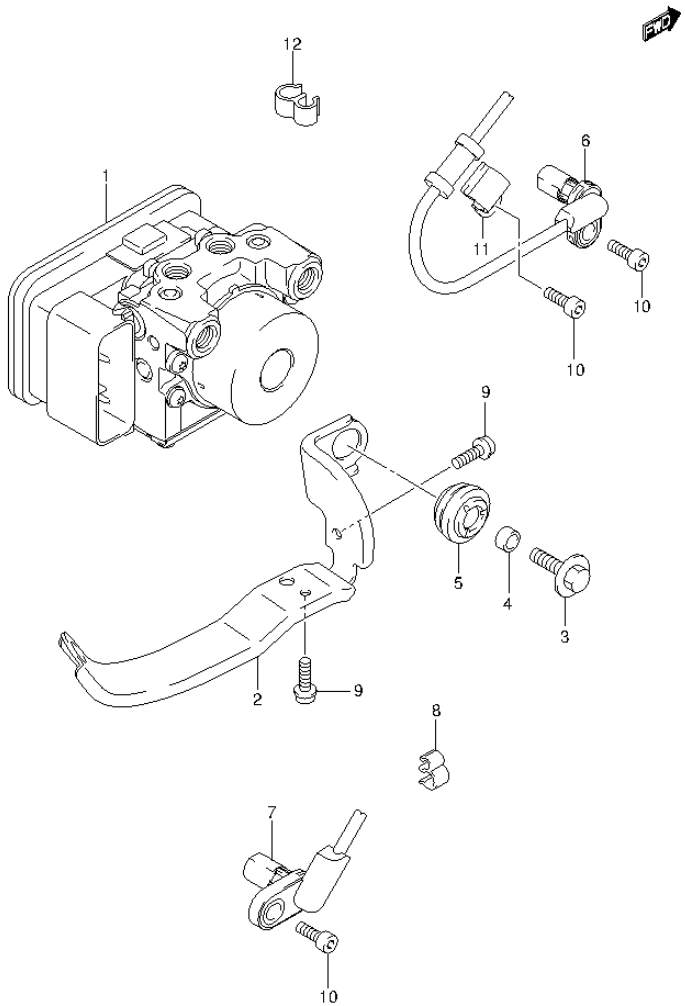

FIG.55 (1-F-11) HYDRAULIC UNIT

REF NO.	PART NO.	DESCRIPTION	Q'TY	REMARKS
1	55610-15H01	UNIT ASSY, HYDRAULIC ABS	1	
2	55660-15H00	HOLDER, HYDRAULIC UNIT	1	
3	55661-10G00	BOLT, HYDRAULIC UNIT MTG	2	
4	55662-10G00	SPACER, HYDRAULIC UNIT	2	
5	09320-10066	RUBBER	2	
6	55710-15H10	SENSOR, FRONT WHEEL ABS	1	
7	65710-15H10	SENSOR, REAR WHEEL ABS	1	
8	09408-00266	CLAMP	7	
9	07120-0612A	BOLT	2	
10	07130-0612B	BOLT	3	
11	55731-23H00	CLAMP, SENSOR FRONT	1	
12	09407-14407	CLAMP	1	

FIG.56

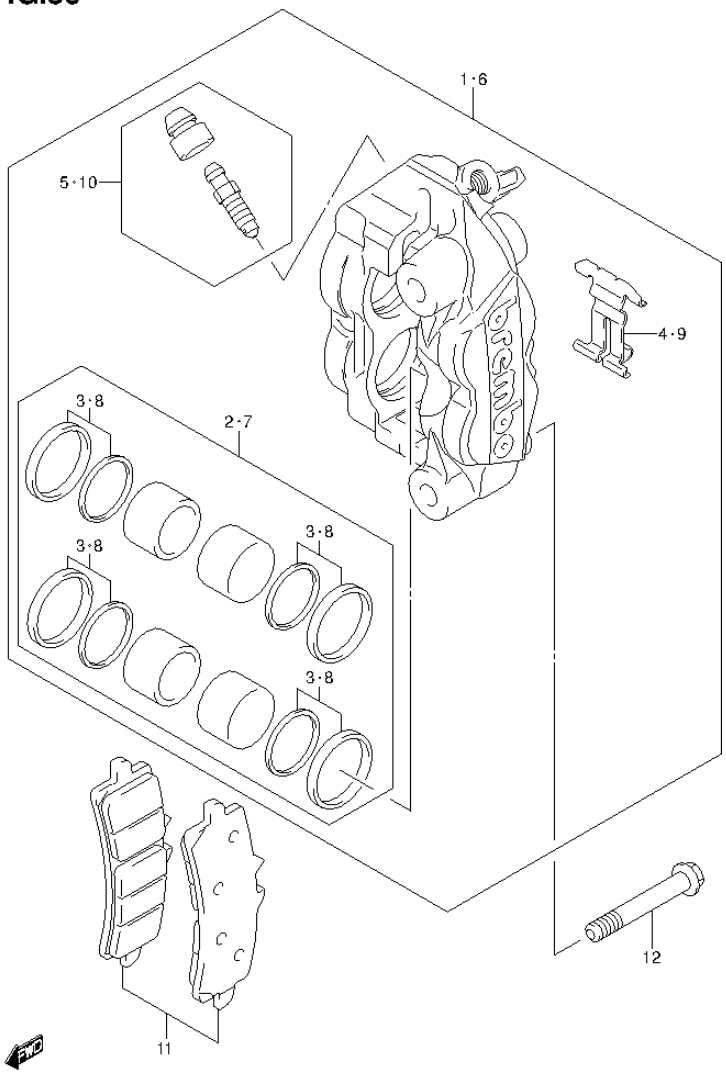

FIG.56 (1-F-12) FRONT CALIPER

REF NO.	PART NO.	DESCRIPTION	Q'TY	REMARKS
1	59100-14J10-999	CALIPER ASSY, FRONT RH	1	
2	59100-14810	.PISTON SET	1	
3	59100-14820	..SEAL SET, PISTON	1	
4	59151-14J00	.SPRING, PAD	1	
5	59100-14840	.BLEEDER SET	1	
6	59300-14J10-999	CALIPER ASSY, FRONT LH	1	
7	59100-14810	.PISTON SET	1	
8	59100-14820	..SEAL SET, PISTON	1	
9	59151-14J00	.SPRING, PAD	1	
10	59100-14840	.BLEEDER SET	1	
11	59100-14860	PAD & SHIM SET	2	
12	09103-10450	BOLT (10X70)	4	

FIG.57

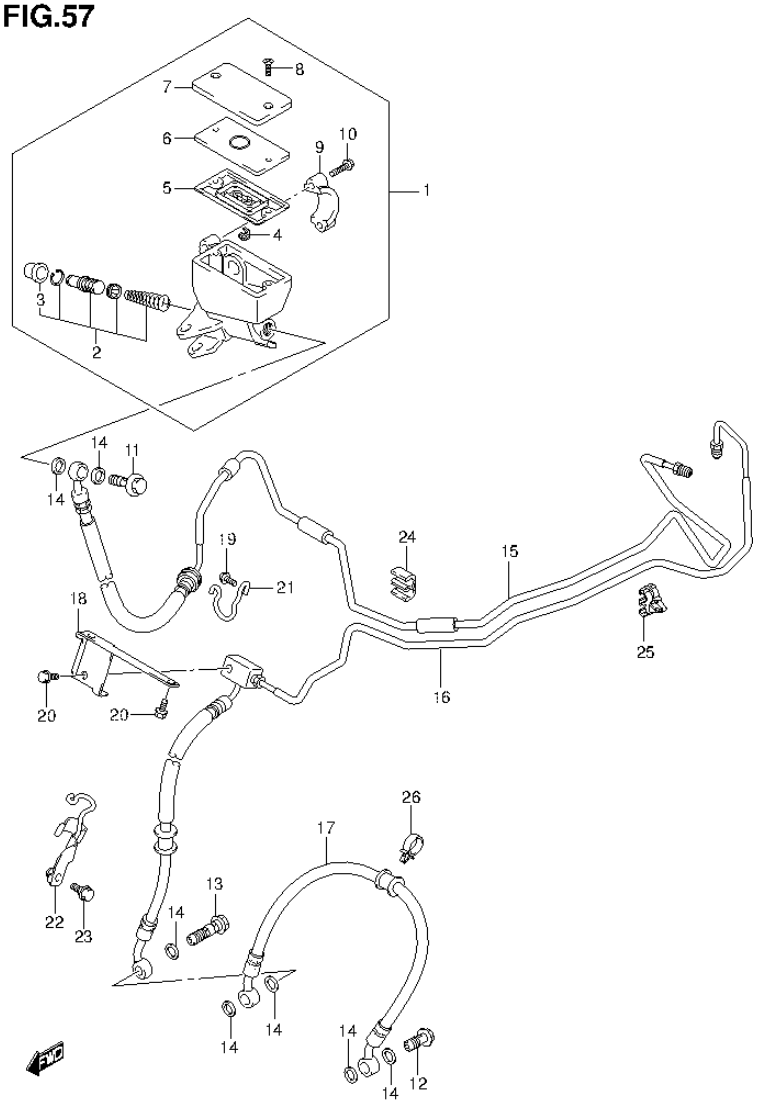

FIG.57 (1-F-13) FRONT BRAKE HOSE (GSX1300RAL4 E99)

REF NO.	PART NO.	DESCRIPTION	Q'TY	REMARKS
1	59600-24F30	CYLINDER ASSY, FRONT MASTER	1	
2	59600-24810	.PISTON/CUP SET	1	
3	59666-44300	..BOOT	1	
4	59664-48B00	.PROTECTOR	1	
5	59667-49460	.DIAPHRAGM	1	
6	59668-41C00	.PLATE	1	
7	59669-10G00	.CAP	1	
8	69689-49300	.SCREW	2	
9	59671-36500	.HOLDER	1	
10	59675-06F10	.BOLT (6X22)	2	
11	09360-10062	UNION	1	
12	09360-10062	UNION	1	LH
13	09360-10064	UNION	1	RH
14	09161-10009	WASHER (10X15X1.5)	7	
15	59200-15H00	HOSE ASSY, FRONT BRAKE NO.1	1	
16	59400-15H00	HOSE ASSY, FRONT BRAKE NO.2	1	
17	59240-15H10	HOSE, FRONT BRAKE NO.2	1	
18	59243-15H00	BRACKET, BRAKE HOSE	1	
19	01547-0612A	BOLT	1	
20	01547-0616A	BOLT	3	
21	59245-15H00	CLAMP, BRAKE HOSE	1	
22	59270-15H10	CLAMP, BRAKE HOSE	1	
23	09111-06107	BOLT (6X12)	1	
24	09403-06324	CLAMP	1	
25	09403-07334	CLAMP	1	
26	09403-16412	CLAMP	1	

FIG.58

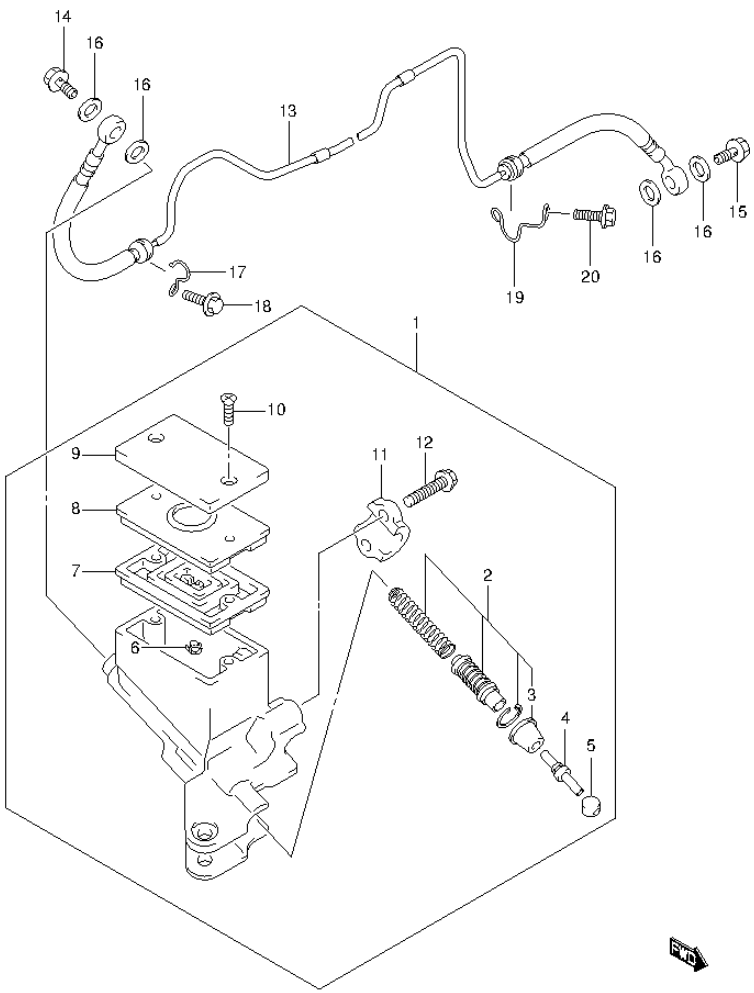

GSX1300RAL4_E99_058
CLUTCH HOSE

FIG.58 (1-F-14) CLUTCH HOSE

REF NO.	PART NO.	DESCRIPTION	Q'TY	REMARKS
1	59800-24F30	CYLINDER ASSY, CLUTCH MASTER	1	
2	59800-24810	.PISTON/CUP SET	1	
3	59866-23H00	..BOOT	1	
4	59871-23H00	.ROD, PUSH	1	
5	59892-08A00	.BUSH	1	
6	59664-48B00	.PROTECTOR	1	
7	59667-49460	.DIAPHRAGM	1	
8	59668-41C00	.PLATE	1	
9	59669-10G00	.CAP	1	
10	69689-49300	.SCREW	2	
11	59671-36500	.HOLDER	1	
12	59675-06F10	.BOLT (6X22)	2	
13	59910-24F10	HOSE, CLUTCH	1	
14	09360-10062	UNION	1	
15	09360-10062	UNION	1	
16	09161-10009	WASHER (10X15X1.5)	4	
17	59915-24F00	CLAMP, HOSE NO.1	1	
18	01550-0616A	BOLT	1	
19	59921-24F00	CLAMP, HOSE NO.2	1	
20	01550-0616A	BOLT	1	

FIG.59

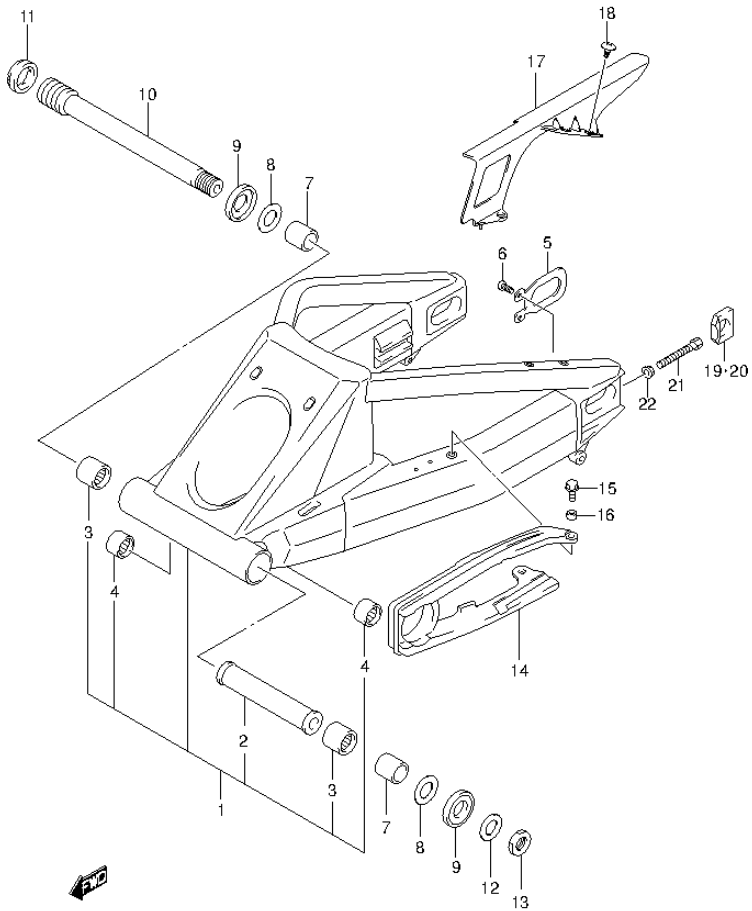

FIG.59 (1-H-15) REAR SWINGINGARM

REF NO.	PART NO.	DESCRIPTION	Q'TY	REMARKS
1	61000-24F50-YAP	SWINGINGARM ASSY, REAR (BLACK)	1	
2	61281-33E20	.SPACER, CENTER	1	
3	09263-30040	.BEARING (30X40X25)	2	
4	09263-17037	.BEARING (17X24X25)	2	
5	61124-33E00	PLATE, BRACKET	1	
6	09125-06073	SCREW (6X16)	1	
7	61251-17E20	SPACER, BEARING	2	
8	08211-25481	WASHER	2	
9	61262-17E10	SEAL, RR SWGARM PIVOT	2	
10	61211-16G00	SHAFT, PIVOT	1	
11	61214-40C31	NUT, PIVOT SHAFT	1	
12	09160-25070	WASHER (25.2X42X3.2)	1	
13	09159-25003	NUT	1	
14	61273-15H00	BUFFER, CHAIN TOUCH DEFENSE	1	
15	09116-06152	BOLT (6X20)	2	
16	09180-06306	SPACER (6.5X9X5)	2	
17	61311-15H00	CASE, CHAIN	1	
18	09139-06168	SCREW (6X16)	3	
19	61446-40F10	ADJUSTER, CHAIN RH	1	
20	61445-40F20	ADJUSTER, CHAIN LH	1	
21	09100-08287	BOLT (8X50)	2	
22	08316-1008A	NUT	2	

FIG.60

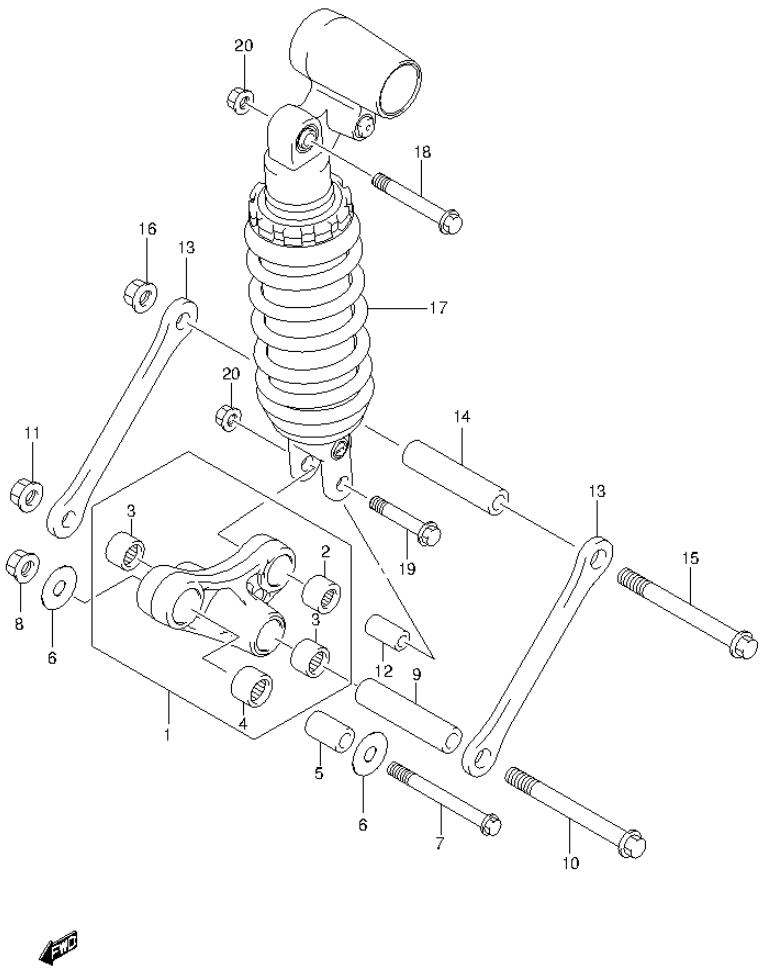

FIG.60 (1-G-2) REAR CUSHION LEVER (GSX1300RAL4 E99)

REF NO.	PART NO.	DESCRIPTION	Q'TY	REMARKS
1	62600-24831	LEVER SET, REAR CUSHION	1	
2	09263-20073	.BEARING (20X27X30)	1	
3	09263-17037	.BEARING (17X24X25)	2	
4	09263-17034	.BEARING (17X24X26)	1	
5	62684-12C00	SPACER, FRONT (12X20X32)	1	
6	08211-12301	WASHER	2	
7	62658-19F00	BOLT, FRONT (12X78)	1	
8	09159-12056	NUT	1	
9	62626-33D00	SPACER, CENTER	1	
10	62621-33D10	BOLT, CENTER	1	
11	09159-12056	NUT	1	
12	62684-40A10	SPACER, REAR (10X17X30)	1	
13	62641-24F00	ROD, REAR CUSHION	2	
14	62626-33D00	SPACER, ROD	1	
15	62621-33D10	BOLT, ROD	1	
16	09159-12056	NUT	1	
17	62100-24F50	ABSORBER ASSY, REAR SHOCK	1	
18	09103-10033	BOLT (10X70)	1	
19	09103-10143	BOLT (10X55)	1	
20	09159-10115	NUT	2	

FIG.61

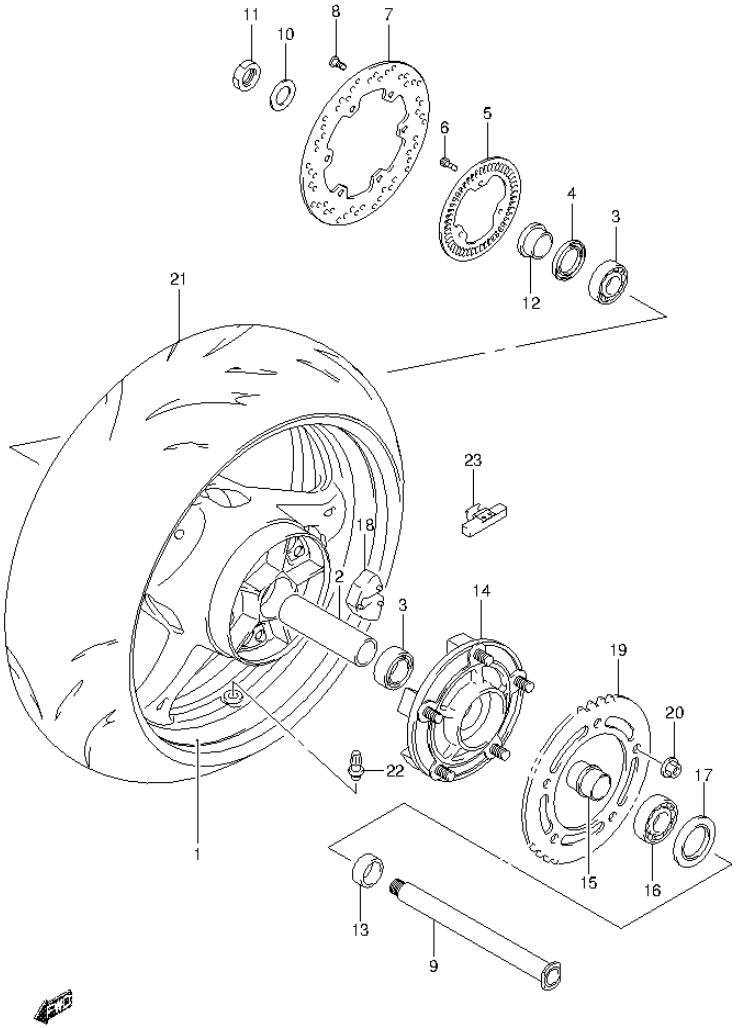

FIG.61 (1-G-3) REAR WHEEL (GSX1300RAL4 E99)

REF NO.	PART NO.	DESCRIPTION	Q'TY	REMARKS
1	64111-15H10-019	WHEEL, REAR (17M/CXMT6.00) (BLACK)	1	
2	64731-40F10	SPACER, HUB BEARING	1	
3	09262-28052	BEARING (28X52X12)	2	
4	09284-37001	OIL SEAL (37X52X8)	1	RH
5	64162-23H00	RING, SPEED SENSOR (60T)	1	
6	07130-0512A	BOLT	3	
7	69211-15H00	DISC, REAR BRAKE	1	
8	09106-08160	BOLT (8X21)	6	
9	64711-33E20	AXLE, REAR	1	
10	09160-25070	WASHER (25.2X42X3.2)	1	
11	09159-25003	NUT	1	
12	64741-35F00	SPACER, AXLE RH	1	
13	64751-49G00	SPACER, AXLE LH	1	
14	64610-35F30	DRUM, REAR SPROCKET	1	
15	64733-35F00	RETAINER, SPROCKET DRUM	1	
16	09262-32022	BEARING (32X65X17)	1	
17	09285-39001	OIL SEAL (39X65X7)	1	
18	64651-35F20	ABSORBER, HUB SHOCK	5	
19	64511-15H00	SPROCKET, REAR (NT:43)	1	
20	08319-3110A	NUT	5	
21	65110-24F50	TIRE, REAR (190/50 ZR17 M/C (73W))	1	
22	43130-24A00	VALVE ASSY, WHEEL RIM (TR412)	1	
23-1	55411-22H00	BALANCER, WHEEL NO.1 (10G)	AR	
23-2	55412-22H00	BALANCER, WHEEL NO.2 (20G)	AR	
23-3	55413-22H00	BALANCER, WHEEL NO.3 (30G)	AR	

FIG.62

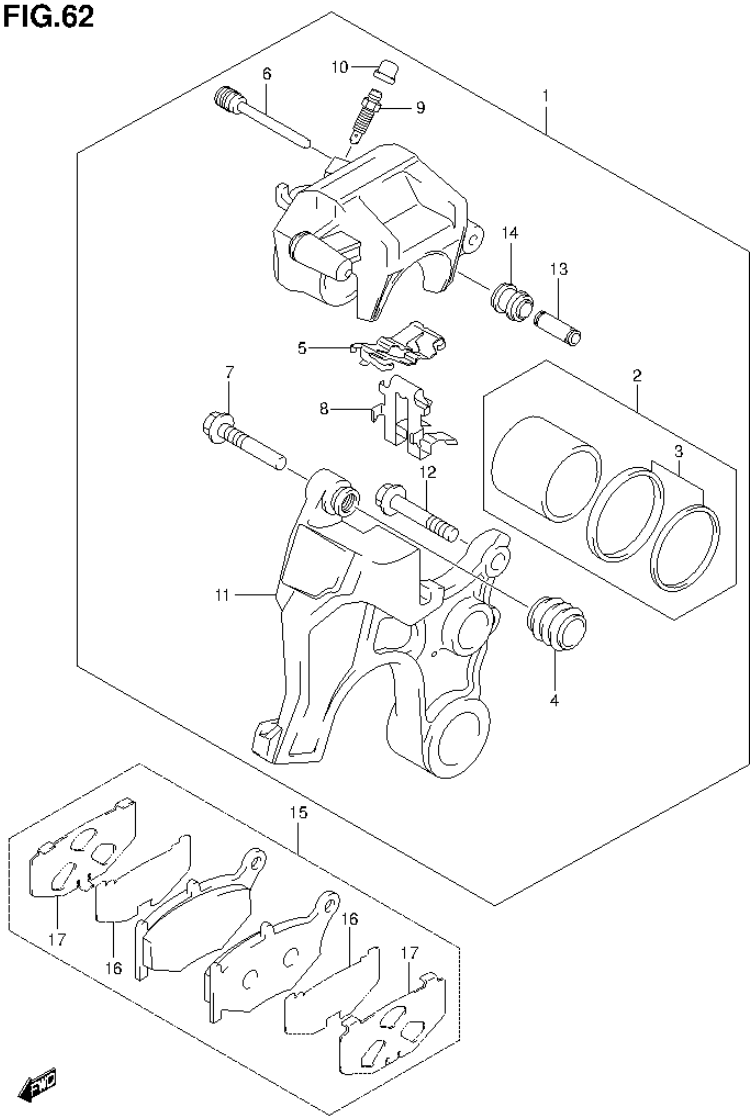

GSX1300RAL4_E99_062
REAR CALIPER

FIG.62 (1-G-4) REAR CALIPER

REF NO.	PART NO.	DESCRIPTION	Q'TY	REMARKS
1	69100-15H31-999	CALIPER ASSY, REAR	1	
2	69100-44890	.PISTON SET	1	
3	69102-05880	..SEAL SET, PISTON	1	
4	59112-44B00	.BOOT, AXLE	1	
5	69115-44G00	.SPRING, PAD	1	
6	59141-40F00	.PIN, PAD	1	
7	69105-44G00	.PIN, BOLT	1	
8	69116-44G00	.RETAINER	1	
9	59121-18410	.BLEEDER	1	
10	55156-66310	.CAP, BLEEDER PLUG	1	
11	69150-15H31	.BRACKET	1	
12	69182-44G00	.BOLT	1	
13	69185-44G00	.SLEEVE	1	
14	69186-44G00	.BOOT, SLEEVE	1	
15	69100-15850	PAD SET	1	
16	69132-44G10	.INSULATOR	2	
17	69133-44G00	.SHIM	2	

FIG.63

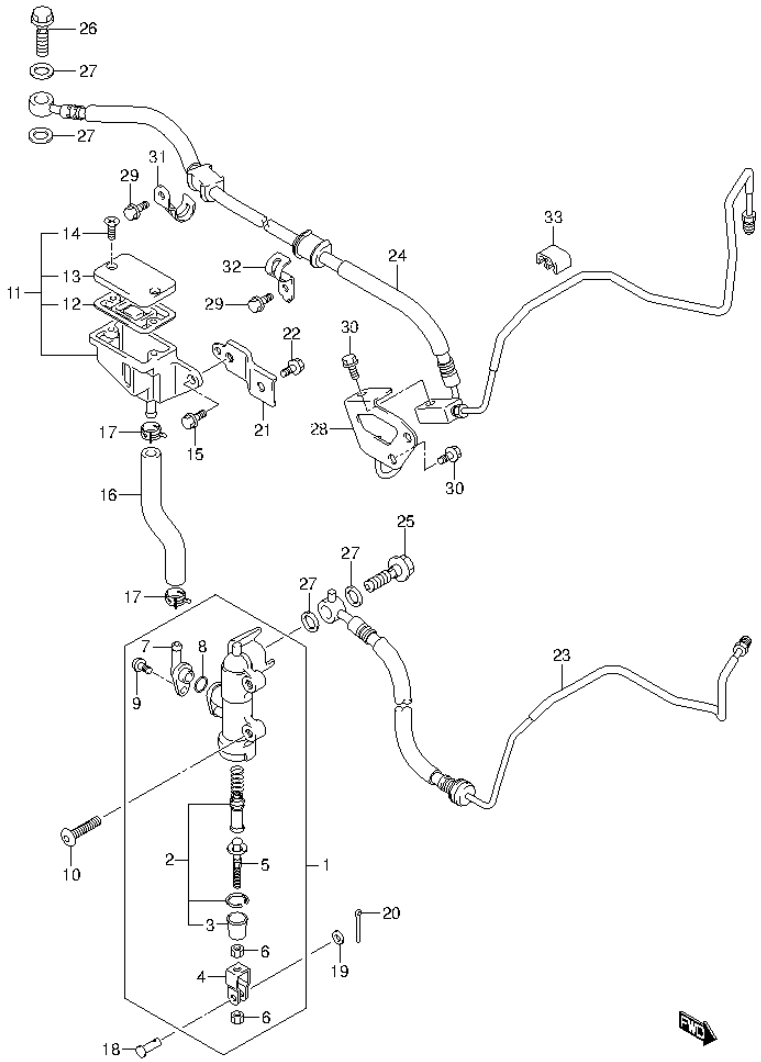

FIG.63 (1-G-5) REAR MASTER CYLINDER (GSX1300RAL4 E99)

REF NO.	PART NO.	DESCRIPTION	Q'TY	REMARKS
1	69600-15H00	CYLINDER ASSY, REAR MASTER	1	
2	69600-04820	.PISTON / CAP SET	1	
3	69691-00A00	..BOOT	1	
4	69692-27A30	.YOKE	1	
5	69670-27A30	.ROD, PUSH	1	
6	69693-05A00	.NUT	2	
7	69672-05A00	.CONNECTOR	1	
8	69686-34200	.O RING	1	
9	02112-7412A	.SCREW	1	
10	09139-06028	SCREW (6X20)	2	
11	69740-01D02	TANK ASSY, RESERVOIR	1	
12	59667-04700	.DIAPHRAGM	1	
13	59669-05D00	.CAP	1	
14	69689-04A00	.SCREW	2	
15	01547-0612A	BOLT	1	
16	69731-24F00	HOSE, RR RESERVOIR TANK	1	
17	09401-13417	CLIP	2	
18	09200-06068	PIN (6X18.2)	1	
19	08322-0106A	WASHER	1	
20	04111-2015A	PIN	1	
21	69750-15H00	BRACKET, RESERVOIR TANK	1	
22	01550-0612A	BOLT	1	
23	69200-15H00	HOSE ASSY, REAR BRAKE NO.1	1	
24	69400-15H00	HOSE ASSY, REAR BRAKE NO.2	1	
25	09360-10061	UNION	1	
26	09360-10062	UNION	1	
27	09161-10009	WASHER (10X15X1.5)	4	
28	69260-15H00	CLAMP, REAR BRAKE HOSE	1	
29	01547-0612A	BOLT	2	
30	01547-0616A	BOLT	3	
31	69268-15H00	CLAMP, REAR BRAKE HOSE	1	
32	69275-15H00	CLAMP, REAR BRAKE HOSE NO.1	1	
33	09403-06324	CLAMP	1	

FIG.64

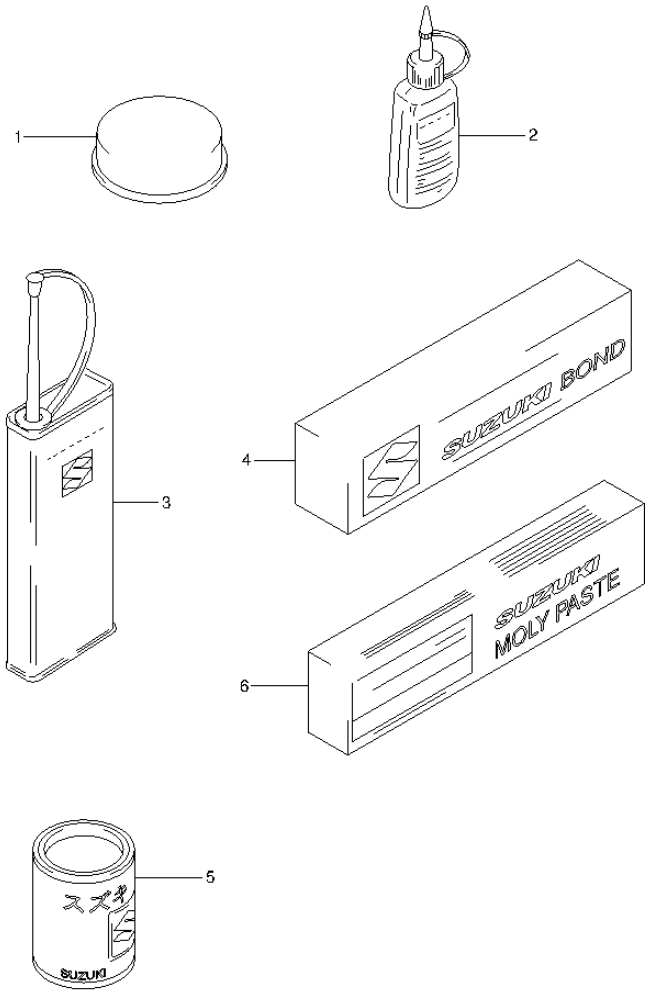

FIG.64 (1-G-6) OPTIONAL

REF NO.	PART NO.	DESCRIPTION	Q'TY	REMARKS
1	99000-25110	SUZUKI PBC GREASE	1	20G
2-1	99000-32020	THREAD LOCK SUPER (1333B)	1	50G
2-2	99000-32030	THREAD LOCK SUPER (1303B)	1	50G
2-3	99000-32050	THREAD LOCK SUPER (1342)	1	50G
2-4	99000-32100	THREAD LOCK SUPER (1305)	1	50G
2-5	99000-32130	THREAD LOCK SUPER (1360)	1	50G
3	99000-32040	THREAD LOCK CEMENT	1	200G
4-1	99000-31140	SUZUKI BOND (1207B)BLACK	1	100G
4-2	99000-31110	SUZUKI BOND (1215)	1	100G
5	99000-25030	SUZUKI SUPER GREASE	1	150G
6	99000-25140	SUZUKI MOLY PASTE	1	50G

10000

PART NO.	FIG.NO.-REF.NO.
11100-15H00	3-1
11115-15H70	3-5
11117-15H00	3-9
11131-33E01	3-13
11141-15H00	1-2
	3-6
11161-33E00	3-25
11170-15H00	2-1
11173-24F00	1-3
	2-2
11178-15H00	1-4
	2-3
11191-13E00	3-26
11191-27E00	1-14
	2-5
11210-15H00-0F0	4-1
11241-15H00	1-5
	4-2
11280-24F00	4-6
11282-24F00	4-7
11283-24F00	4-14
11302-24820	5-1
11319-33E50	5-2
11323-24F10	5-3
11328-24F00	5-5
11331-15H00	5-48
11340-24F01	6-1
11351-24F00	6-27
11361-15H00	6-31
11362-15H00	6-32
11363-15H00	6-33
11364-15H00	6-35
11371-24F00	6-8
11372-21H00	5-50
11372-24F00	6-9
11373-24F00	6-11
11380-24F20	6-12
11382-24F20	6-22
11383-15H00	5-53
11390-34E00	5-25
11390-34E10	5-26
11393-33E01	5-21
11400-15881	1-1
11482-24F00	1-6
	6-3

PART NO.	FIG.NO.-REF.NO.
11483-24F00	1-7
	6-28
11485-24F00	1-8
	5-54
11489-24F10	1-9
	7-2
11491-24F01	1-10
	6-13
11492-24F00	1-11
	6-23
11511-24F10	7-1
11532-46E00	5-31
11611-24F00	5-47
11971-25D00	6-6
11971-33210	6-2
12000-15810	8-5
12111-15H00-0F0	8-9
12140-15H10	8-10
12151-05200	9-4
12151-07D00	8-11
12160-15H00	8-1
12163-24F10	8-2
12164-46E01-0A0	8-4-1
12164-46E01-0B0	8-4-2
12164-46E01-0C0	8-4-3
12164-46E01-0D0	8-4-4
12228-24F00-0A0	5-20-1
	8-7-1
12228-24F00-0B0	5-20-2
	8-7-2
12228-24F00-0C0	5-20-3
	8-7-3
12228-24F00-0D0	5-19
	5-20-4
	8-6
	8-7-4
12228-24F00-0E0	5-20-5
	8-7-5
12228-24F00-0F0	5-20-6
	8-7-6
12229-15H00-0A0	8-8-1
12229-15H00-0B0	8-8-2
12229-15H00-0C0	8-8-3
12229-15H00-0D0	8-8-4
12229-15H00-0E0	8-8-5
12600-24861	9-6
12600-24F00	9-1
12612-24F00	9-3
12615-24F00	9-2
12650-24F01-0F0	10-1

PART NO.	FIG.NO.-REF.NO.
12654-24F00-0F0	10-2
12666-24F00	10-3
12681-26D01	10-9
12686-24F00	10-4
12710-15H00	11-1
12720-15H00	11-2
12731-24F10	8-13
12760-24F01	12-1
12771-15H00	12-2
12773-24F00	12-7
12782-24F01	12-3
12800-41810	11-12
12811-15H00	12-5
12812-31G00	12-6
12830-15H00	12-9
12835-15H00	12-12
12837-02H00	1-12
	12-10
12838-15H00	12-13
12839-15H00	12-15
12891-02F00	11-3
12892-41C00-230	11-11-1
12892-41C00-235	11-11-2
12892-41C00-240	11-11-3
12892-41C00-245	11-11-4
12892-41C00-250	11-11-5
12892-41C00-255	11-11-6
12892-41C00-260	11-11-7
12892-41C00-265	11-11-8
12892-41C00-270	11-11-9
12892-41C00-275	11-11-10
12892-41C00-280	11-11-11
12892-41C00-285	11-11-12
12892-41C00-290	11-11-13
12892-41C00-295	11-11-14
12892-41C00-300	11-11-15
12892-41C00-305	11-11-16
12892-41C00-310	11-11-17
12892-41C00-315	11-11-18
12892-41C00-320	11-11-19
12892-41C00-325	11-11-20
12892-41C00-330	11-11-21
12892-41C00-335	11-11-22
12892-41C00-340	11-11-23
12892-41C00-345	11-11-24
12892-41C00-350	11-11-25
12911-15H00	11-4
12912-15H00	11-5
12921-15H00	11-6
12931-02F10	11-7

PART NO.	FIG.NO.-REF.NO.
12932-24F00	11-9
12933-38400	11-8
13111-15H00	3-20
13150-01H01	5-49
13170-15H10	3-22
	15-2
13269-18G00	13-2
13271-43E00	13-3
13291-26E00	13-4
13295-26E00	13-5
13406-15H20	13-1
13428-15H00	13-11
13471-24F30	14-14
13473-15H10	14-7
13473-21H00	14-4
13474-21H00	14-5
13474-21H10	14-6
13565-15H00	13-16
13575-40F00	13-7
	13-14
13580-18G00	13-6
13580-40F31	13-13
13601-21H00	13-17
13601-35F00	14-8
13605-15H00	13-12
13605-40F00	13-8
	13-15
13650-14G10	15-19
13650-49X00	3-27
13655-14G10	15-20
13680-21H10	14-15
13697-15H00	15-24
13697-24F00	14-11
13697-24F20	14-12
13697-35F00	14-13
13698-21H00	14-16
13700-15H02	15-1
13736-15H01	15-3
13740-15H00	15-4
13746-15H00	15-5
13756-15H00	15-6
13780-15H00	15-7
13788-15H00	15-8
13853-15H00	15-10
13859-41B10	15-11
13882-41G00	15-12
14100-15H02	16-1
14181-22D01	1-13
	16-2
14181-33E00	16-3

PART NO.	FIG.NO.-REF.NO.
14230-15H00	16-4
14240-15H00	16-5
14310-15H03-H01	16-6
14340-15H03-H01	16-7
14414-15H00	16-8
14458-45G10	16-9
14459-15H00	16-10
14770-15H00	16-11
14771-15H00	16-12
14780-15H00	16-13
14790-15H00	16-14
15100-15H10	18-1
15111-27G00	18-2
15112-05H00	18-3
15113-05H00	18-4
15113-35F00	18-5
15114-14J00	18-6
15115-08J00	18-7
15116-10F00	18-8
	18-9
15181-15H10	18-10
15201-35F00	18-14
15420-05H00	18-11
15610-14J00	18-12
15625-29G30	15-23
15625-29G40	15-18
15630-29G30	15-22
15630-29G40	15-17
15710-21H10	14-1
15721-10G00	14-10
15721-21H00	14-3
15721-24F00	14-9
15722-21H00	14-2
15810-15H10	18-15
16321-33E10	7-16
16331-33E00	7-17
16400-24F01	7-13
16440-24F00	7-11
16460-15H00	17-7
16470-15H00	17-8
16491-24F00	7-14
16510-07J00	5-43
16520-24F00	7-8
16591-06B01	5-42
16600-15H20	17-1
16640-24F00	17-5
16650-15H00	17-11
17400-24F10	19-1
17411-24F00	19-2
17418-33400	19-10

PART NO.	FIG.NO.-REF.NO.
17432-07G00	19-8
17435-33400	19-11
17461-48G00	19-6
17470-02F10	19-5
17491-17E01	19-3
17511-24F10	19-7
17568-50F00	21-17
17661-35F00	21-15
17670-15H00	21-14
17710-15H00	20-1
17711-08J00	20-10
17712-40F00	20-11
17730-08J00	20-2
17750-24F00	20-6
17765-09F00	17-12
17771-15H00	20-12
17802-14F00	17-14
17810-15H00	20-8
17820-15H00	20-9
17851-15H00	21-1
17852-15H00	21-2
17853-24F00	21-3
17854-24F00	21-4
17855-15H00	21-8
17861-33E20	21-5
17863-33E00	21-7
17910-15H00	21-19
17931-02FA0	21-20
17981-15H00	21-21
17982-22H00	21-22
18117-15H11	13-9
18119-05H00	13-10
18213-15H10	16-31
18450-35F30	22-1
18461-15H00	22-4
18471-15H00	22-5
18510-29G31	22-6
18531-15H00	22-2
18610-15H00	22-7
18711-15H00	22-9
18803-45G00	50-3-1
18803-48G00	50-3-2

20000

PART NO.	FIG.NO.-REF.NO.
21200-24810	23-1
21410-24F00	23-4
21413-24F30	23-5
21441-24F10	23-6
21441-24F30	23-7
21442-24F00	23-8
21451-24F00	23-9
21451-24F10	23-10
21462-24F00	23-11
21471-24F00	23-12
21472-06G00	23-13
21481-24F32	23-14
21482-24F30	23-15
21610-02F12	23-16
23110-24F00	23-20
23111-26D00	23-21
23117-46E00	23-22
23121-31E00	23-23
23160-15H10	23-24
23163-10F00	23-25
23164-10F00	23-26
24120-24F00	24-1
24130-15H00	24-18
24136-48G01	24-19
24221-15H00	24-2
24231-15H00	24-3
24251-15H01	24-4
24252-24F10	24-5
24261-15H00	24-6
24262-24F10	24-7
24311-15H00	24-20
24312-24F10	24-21
24321-15H00	24-22
24322-48G00	24-23
24331-15H00	24-24
24332-24F10	24-25
	24-26
24341-15H00	24-27
24351-15H01	24-28
24361-15H00	24-29
24741-24F10	25-5
25211-24F20	25-1
25231-24F20	25-2
25310-24F00	25-6
25312-42F01	25-8
25350-24F00	25-13
25355-24F00	25-14
25381-13E00	25-9
25411-24F00	25-3
25411-38B01	25-4

PART NO.	FIG.NO.-REF.NO.
25510-15H00	25-17
25512-06G10	25-18
25520-40F00	25-26
25525-19F00	25-28
25526-47000	25-27
	25-30
25600-17G01	25-29
25617-03F10	25-32
25652-20C00	25-31
25671-01011	25-19
27510-15H00	24-43
27531-15H00	24-44
27532-15H00	24-45
27600-24F60-118	24-46
27620-24F60	24-47
30000	
31100-15H20	26-1
31132-45C00	26-2
31143-38300	26-3
31150-15H20	26-4
31153-49210	26-5
31171-24F00	26-6
31172-38300	26-7
31173-88C00	26-8
31264-44110	26-9
31281-24F00	26-10
31361-38300	26-11
31361-43400	26-12
31497-45000	25-38
31800-44G00	28-1
31861-38G00	28-2
32101-24F20	27-1
32102-24F20	27-2
32371-24F00	27-3
32800-10G40	28-5
32920-15HF0	28-13
33220-01H00	28-10
33410-24F10	28-12
33610-17E10	29-1
33624-16G00	29-5
33651-37000	40-24
33652-02H00	46-19
33652-36000	28-6
	29-2
33652-49000	44-11
33810-15H00	29-3

PART NO.	FIG.NO.-REF.NO.
33820-15H10	29-4
33860-15H00	29-6
33960-06G10	28-14
34111-15H01	30-8
34120-15H20	30-1
34124-39G00	30-3
34150-15H00	30-2
34153-15H00	30-4
34183-31F10	30-5
34187-24F00	30-9
34193-15H00	30-6
34810-15H10	18-13
34955-13E00	30-10
34981-47H01	30-12
34990-35F00	30-13
35100-15H01-999	31-1
35173-14G00	31-4
35173-15H00	31-3
35175-24F00	31-2
35601-15H01	32-1
35602-15H01	32-4
35603-15H01	32-8
35604-15H01	32-11
35618-15H00	32-2
35638-15H00	32-5
35658-15H00	32-9
35678-15H00	32-12
35710-15H01	33-1
35726-15H00	33-2
35726-15H10	33-3
35910-41G01	33-7
35912-41G01	33-8
35913-41G00	33-9
35917-41G00	33-10
35950-14A11	31-12
35970-14A20	33-18
35975-15H00	33-19
35976-15H00	33-20
36118-15H00	31-5
36610-15HC0	34-1
36618-33E00	34-6
36619-15H00	34-7
36620-15H00	34-8
36651-48E00	28-7
36654-06J00	34-26
36742-45G00	34-5
36744-24F10	34-19
36855-15H10	34-18
36857-15H00	34-9
36920-45G00	34-17

PART NO.	FIG.NO.-REF.NO.
36930-60A10	45-14
37100-15850	34-21
37100-15H80	34-22
37146-15H00	34-38
37180-15H00	34-24
37200-15H10	35-1
37400-18H12	35-3
37730-15H01	25-39
37740-19F00	34-27
37820-33D10	7-21
37822-33D00	7-22
37840-24F00	34-29
38500-24F20	34-32
38610-03F00	32-15
38740-26E00	34-34
	34-35
38741-24F00	34-36
40000	
41100-15H11-YAP	36-1
41200-15H11	36-2
41911-33E10	36-6
41921-15H20	36-8
41921-15H30	36-9
41922-19F12	36-10
41922-33E30	36-11
42310-24F00	37-1
42330-24F01	37-6
43111-24F00	37-8
43130-24A00	54-13
	61-22
43510-15H00	38-1
43511-44G10	38-2
43521-15H00	38-3
43521-44G10	38-4
43536-44G00	38-5
43550-44G00	38-19
	38-28
	38-28
43550-44G10	38-6
43561-24F00	37-10
43576-15H00	38-7
43576-15H10	38-8
43600-15H00	38-18

PART NO.	FIG.NO.-REF.NO.
43611-44G00	38-20
43621-44G00	38-29
	38-29
43700-15H00	38-27
	38-27
43816-01H10	38-21
	38-30
	38-30
44100-15H90-6UX	39-1-1
44100-15H90-YKY	39-1-3
44100-15H90-YVZ	39-1-2
44191-15H00	39-6
44191-15H10	39-7
44200-16850	39-4
44423-15H00	39-25
44424-15H00	39-27
44424-15H10	39-28
44427-15H00	39-26
44511-16G00	39-10
44512-16G00	39-11
44530-15H01	39-22
44541-24F00	39-12
44543-15H00	39-13
44550-15H01	39-16
44555-15H00	39-14
44561-18G00	39-21
44574-35F00	39-24
45100-15H01-EJY	51-1
45149-15H00	51-5
45149-44G00	39-23
45149-45330	51-2
45191-15H00	51-11
45213-42F00	51-7
	51-18
45220-15H00	51-9
45280-18G01	51-14
45288-14F20	51-15
45289-11F00	51-13
45290-15H00	51-6
45300-15H10-U6H	51-4
45516-01H00	40-12
45550-15H01-YKY	51-16-3
45550-15H01-YVB	51-16-1
45550-15H01-YVZ	51-16-2
45553-15H00	51-17
46211-15H00-YKY	51-20-3
46211-15H00-YVB	51-20-1
46211-15H00-YVZ	51-20-2
46212-24F11	51-24
46217-24F00	51-23

PART NO.	FIG.NO.-REF.NO.
46315-24F01	36-4
47110-15H01-6UX	40-1-1
47110-15H01-YKY	40-1-3
47110-15H01-YVZ	40-1-2
47115-16G00	40-22
47190-24F01	51-19
47190-24F11	51-22
47190-24F21	40-25
47191-06J00	46-21
47191-24F00	40-23
47191-24F20	40-27
47191-24F30	40-26
47210-15H01-6UX	40-4-1
47210-15H01-YKY	40-4-3
47210-15H01-YVZ	40-4-2
47310-15H20-YKY	40-9-3
47310-15H20-YVB	40-9-1
47310-15H20-YVZ	40-9-2
47312-15H00	40-11
47411-15H00-YKY	40-16-3
47411-15H00-YVB	40-16-1
47411-15H00-YVZ	40-16-2
47511-15H00	40-3
	40-6
47851-15H00	44-12
50000	
51103-24F71	52-1
51104-24F70	52-17
51110-24F71	52-2
51120-24F70	52-18
51130-24F50	52-14
	52-30
51146-24F50	52-7
	52-23
51147-24F50	52-8
	52-24
51148-41310	52-9
	52-25
51153-41G00	52-4
	52-20
51156-14200	52-5
	52-21
51158-14200	52-3
	52-19
51158-40F30	52-12
	52-28

PART NO.	FIG.NO.-REF.NO.
51166-01D80	53-4
51166-24F60	52-33
51171-24F50	52-11
	52-27
51173-41G00	52-6
	52-22
51176-40F30	52-13
	52-29
51311-24F50	53-5
51328-24F50	53-6
51351-24F50	52-15
	52-31
51352-13A60	52-10
	52-26
51353-24F00	53-8
51356-24F50	53-7
51410-24F50	53-1
51631-33E00	53-13
51641-33E00	53-12
51643-41G00	53-11
51644-12C00	53-2
	53-10
51750-15H00	53-14
53100-15H00-YKY	41-1-3
53100-15H00-YVB	41-1-1
53100-15H00-YVZ	41-1-2
53331-15H00	41-2
54111-15H10-019	54-1
54162-27G00	54-5
54711-15H00	54-7
54712-41G10	54-8
54731-33E20	54-2
54751-41G10	54-9
55110-24F60	54-12
55156-66310	62-10
55411-22H00	54-14-1
	61-23-1
55412-22H00	54-14-2
	61-23-2
55413-22H00	54-14-3
	61-23-3
55610-15H01	55-1
55660-15H00	55-2
55661-10G00	55-3
55662-10G00	55-4
55710-15H10	55-6
55731-23H00	55-11
56111-15H00	42-1
56151-15H00	42-2
56200-15830	42-14

PART NO.	FIG.NO.-REF.NO.
56210-15H10	42-3
56240-01D00	42-9
56243-01D00	42-10
56246-24F00	42-6
56247-24F00	42-5
56500-24F20	42-17
56600-24F20	42-18
57110-21H01	43-1
57211-21H00	43-2
57300-14G22	43-3
57431-17H02	43-4
	43-9
57460-14J01	43-6
57465-17C00	43-7
57500-24F30	43-8
57560-02FA0	43-11
58300-15H20	42-21
58300-15H30	42-22
58620-15H00	42-25
58623-24F10	42-23
59100-14810	56-2
	56-7
59100-14820	56-3
	56-8
59100-14840	56-5
	56-10
59100-14860	56-11
59100-14J10-999	56-1
59112-44B00	62-4
59121-01A00	23-27
59121-18410	62-9
59122-01A00	23-28
59141-40F00	62-6
59151-14J00	56-4
	56-9
59200-15H00	57-15
59210-15H10	54-10
59240-15H10	57-17
59243-15H00	57-18
59245-15H00	57-21
59270-15H10	57-22
59300-14J10-999	56-6
59400-15H00	57-16
59600-24810	57-2
59600-24F30	57-1
59664-48B00	57-4
	58-6
59666-44300	57-3
59667-04700	63-12
59667-49460	57-5

PART NO.	FIG.NO.-REF.NO.
	58-7
59668-41C00	57-6
	58-8
59669-05D00	63-13
59669-10G00	57-7
	58-9
59671-36500	57-9
	58-11
59800-24810	58-2
59800-24F30	58-1
59866-23H00	58-3
59871-23H00	58-4
59892-08A00	58-5
59910-24F10	58-13
59915-24F00	58-17
59921-24F00	58-19
60000	
61000-24F50-YAP	59-1
61124-33E00	59-5
61211-16G00	59-10
61214-40C31	59-11
61251-17E20	59-7
61262-17E10	59-9
61273-15H00	59-14
61281-33E20	59-2
61311-15H00	59-17
61445-40F20	59-20
61446-40F10	59-19
62100-24F50	60-17
62278-14100	52-16
	52-32
62600-24831	60-1
62621-33D10	60-10
	60-15
62626-33D00	60-9
	60-14
62641-24F00	60-13
62658-19F00	60-7
62684-12C00	60-5
62684-40A10	60-12
63111-15H00-291	44-1
63112-15H00-291	44-9

PART NO.	FIG.NO.-REF.NO.
63113-15H00	44-17
63114-15H00	44-19
63120-15H00	44-7
63130-15H00	44-3
63131-10F00	20-13
63192-16GA0	44-18
63411-24F00	44-4
63421-24F00	44-6
64111-15H10-019	61-1
64162-23H00	61-5
64339-14101	53-16
64511-15H00	61-19
64610-35F30	61-14
64651-35F20	61-18
64711-33E20	61-9
64731-40F10	61-2
64733-35F00	61-15
64741-35F00	61-12
64751-49G00	61-13
65110-24F50	61-21
65710-15H10	55-7
68110-15H20-AV8	39-2-1
68110-15H20-AV9	39-2-2
68110-15H20-AWF	39-2-3
68111-47HA0	39-3
68131-15H00-AWG	40-2-1
	40-5-1
68131-15H00-AWH	40-2-2
	40-5-2
68131-15H00-AWJ	40-2-3
	40-5-3
68270-15H40-AV8	45-2-1
68270-15H40-AV9	45-2-2
68270-15H40-AWF	45-2-3
68270-15H50-AA3	45-3-1
68270-15H50-AGS	45-3-2
68270-15H50-AJP	45-3-3
68281-24F10-17U	45-4-1
68281-24F10-YWW	45-4-2
68281-47HA0	42-4
68319-29F00	50-1-1
68319-29F50	50-1-3
68319-29FG0	50-1-2
68332-15H10	50-2-1
68332-15H20	50-2-2
68332-15H60	50-2-3
68641-19F00-17U	40-10-1
68641-19F00-YWW	40-10-2
68685-15H40-AWK	48-2-1
68685-15H40-AWL	48-2-2

PART NO.	FIG.NO.-REF.NO.
68685-15H40-AWM	48-2-3
68695-15H40-AWK	48-4-1
68695-15H40-AWL	48-4-2
68695-15H40-AWM	48-4-3
69100-15850	62-15
69100-15H31-999	62-1
69100-44890	62-2
69102-05880	62-3
69105-44G00	62-7
69115-44G00	62-5
69116-44G00	62-8
69132-44G10	62-16
69133-44G00	62-17
69150-15H31	62-11
69182-44G00	62-12
69185-44G00	62-13
69186-44G00	62-14
69200-15H00	63-23
69211-15H00	61-7
69260-15H00	63-28
69268-15H00	63-31
69275-15H00	63-32
69400-15H00	63-24
69600-04820	63-2
69600-15H00	63-1
69670-27A30	63-5
69672-05A00	63-7
69686-34200	63-8
69689-04A00	63-14
69689-49300	57-8
	58-10
69691-00A00	63-3
69692-27A30	63-4
69693-05A00	63-6
69731-24F00	63-16
69740-01D02	63-11
69750-15H00	63-21
90000	
94401-15H40-6UX	45-1-1
94401-15H40-YKY	45-1-3
94401-15H40-YVZ	45-1-2
94419-15H01	45-13
94420-15H01	47-6

PART NO.	FIG.NO.-REF.NO.
94423-15H00	47-8
94424-05H00	41-3
94424-15H00	46-1
94425-15H00	46-10
94430-15H01	47-7
94443-21H00	31-6
94450-15H50-AHX	48-1-3
94450-15H50-YLF	48-1-1
94450-15H50-YWW	48-1-2
94458-15H10	45-11
94460-15H50-AHX	48-3-3
94460-15H50-YLF	48-3-1
94460-15H50-YWW	48-3-2
94461-15H00	45-16
94462-15H00	45-17
94463-15H00	45-18
94470-15H20-YKY	49-1-3
94470-15H20-YVB	49-1-1
94470-15H20-YVZ	49-1-2
94472-15H00	49-2
94472-15H10	49-4
94472-15H20	49-3
94474-15H00	48-13
94475-15H00	49-8
94476-15H00	48-10
94476-15H10	48-12
94476-17H00	20-14
94478-15H00	49-13
94478-15H10	49-14
94478-15H20	49-15
94479-15H00	49-19
94479-35F00	44-13
	48-6
	48-7
	49-10
	49-29
94480-15H20-YKY	49-5-3
94480-15H20-YVB	49-5-1
94480-15H20-YVZ	49-5-2
94482-15H00	49-6
94482-15H10	49-7
94484-15H00	48-14
94484-24F00	46-25
	47-9
94485-15H00	49-9
94486-15H00	48-11
94488-15H00	49-16
94488-15H10	49-17
94488-15H20	49-18
94489-15H00	49-11

PART NO.	FIG.NO.-REF.NO.
94498-15H00	48-9
94510-15H00	47-1
94520-24F10	46-22
94530-24F10	46-23
94540-15H00	49-27
94541-41C00	47-3
94560-15H00	49-23
94576-24F00	42-19
94611-15H00	45-7
94621-15H00	46-13
94622-15H00	46-15
94623-15H00	46-17
94631-15H00	46-14
94632-15H00	46-16
94633-15H00	46-18
94641-15H00	46-6
94643-15H00	46-2
94644-15H00	46-3
94651-15H00	46-7
94661-15H00-YKY	49-25-3
94661-15H00-YVB	49-25-1
94661-15H00-YVZ	49-25-2
94667-15H00	49-26
94671-15H00-YKY	47-12-3
94671-15H00-YVB	47-12-1
94671-15H00-YVZ	47-12-2
94681-15H00-YKY	47-13-3
94681-15H00-YVB	47-13-1
94681-15H00-YVZ	47-13-2
95700-14F00	51-12
99000-25030	64-5
99000-25110	64-1
99000-25140	64-6
99000-31110	64-4-2
99000-31140	64-4-1
99000-32020	64-2-1
99000-32030	64-2-2
99000-32040	64-3
99000-32050	64-2-3
99000-32100	64-2-4
99000-32130	64-2-5
99000-69471	11-13
99011-15H56-01A	50-4-1
99011-15H56-029	50-4-3
99011-15H56-068	50-4-2
00000	

PART NO.	FIG.NO.-REF.NO.
01421-0625B	4-3
01500-0625A	25-36
01547-0530A	34-25
01547-0612A	5-7
	42-26
	57-19
	63-15
	63-29
01547-0616A	57-20
	63-30
01547-0620A	5-51
	21-13
	21-18
01547-0625A	5-4
	5-55
01547-0630A	5-52
	7-3
	7-15
	51-10
01547-0630B	42-20
01547-0635A	5-56
	19-14
01547-0640A	5-15
	7-4
01547-0650A	5-11
01547-0660A	5-16
01550-0610A	34-16
01550-0612A	17-6
	20-7
	63-22
01550-0612B	34-37
	49-24
01550-0616A	44-2
	44-8
	58-18
	58-20
01550-0620A	7-9
01550-0620B	46-24
01550-0630B	3-8
01550-0635A	3-14
01550-0645A	3-15
01550-0816A	39-15
	49-28
01550-0820A	16-29
01550-0865A	5-12
01550-0880A	5-13
01550-1060A	5-14
02112-0525B	35-4
02112-0530B	35-2
02112-0545B	35-5

PART NO.	FIG.NO.-REF.NO.
02112-0610A	23-33
02112-0616A	19-12
02112-7412A	63-9
02122-0612A	12-8
02142-0516A	38-24
	38-33
	38-33
02142-0525A	38-15
02142-0530A	38-16
02142-0612A	33-21
02162-0616A	28-9
03211-0416A	33-12
03241-1516B	46-8
03511-0516A	15-21
03541-0516A	33-6
03541-0516B	32-7
03541-0525A	15-15
04111-2015A	63-20
04211-09129	23-34
04211-09149	5-57
	6-14
	6-24
	6-29
	6-36
04211-09189	6-4
04211-11169	3-7
	4-5
04221-04089	8-3
	25-7
04221-07209	24-17
	24-41
06111-07004	38-25
	38-34
	38-34
07120-0510B	34-20
07120-0512B	30-14
07120-0516A	25-40
07120-0612A	18-16
	34-33
	55-9
07120-0612B	5-24
	5-32
07120-0655B	3-11
07120-0695B	39-20
07130-0510A	25-41
07130-0512A	27-6
	54-6
	61-6
07130-0612A	12-4
07130-0612B	55-10

PART NO.	FIG.NO.-REF.NO.
07130-0616A	28-11
07130-0620A	10-10
07130-0625A	12-11
	23-32
07130-0635A	27-7
07130-0660B	42-15
07130-0816B	5-34
07130-0825A	16-30
07130-0825B	30-15
07130-08307	53-17
07130-1060A	42-8
07130-1065B	42-7
08211-06141	25-16
08211-10285	9-8
08211-12301	60-6
08211-20403	9-9
08211-25481	59-8
08211-30405	24-42
08310-00067	26-14
08316-1005A	33-23
08316-1006A	33-17
	33-24
	51-8
08316-1006B	4-4
	43-10
08316-1008A	59-22
08316-1008B	34-31
08319-2106A	43-5
08319-3106A	41-6
08319-3108A	53-18
08319-3110A	42-12
	61-20
08322-0105B	45-9
08322-0106A	3-16
	63-19
08322-0106B	44-20
08331-3112A	7-20
	25-37
08331-3114A	25-25
08331-3118A	37-11
08332-1106A	38-17
	38-26
	38-35
	38-35
08361-3506A	26-16
09100-06099	19-13
09100-08287	59-21
09103-06172	6-34
09103-06212	6-15
	6-25

PART NO.	FIG.NO.-REF.NO.
	26-15
09103-06213	6-5
	6-30
09103-06214	6-16
	6-26
09103-06216	6-37
09103-06222	3-10
09103-06239	6-38
09103-06266	3-2
09103-06283	22-8
09103-06286	10-11
09103-06293	3-3
09103-08155	5-17
09103-08355	5-18
09103-08357	34-30
09103-08358	16-15
09103-08367	47-2
09103-08392	16-16
09103-09008	5-8
09103-09010	5-9
09103-10033	60-18
09103-10143	60-19
09103-10189	9-10
09103-10296	36-3
09103-10450	56-12
09103-12028	27-4
09103-12119	5-45
09103-12120	5-44
09106-05017	39-5
09106-05031	33-4
09106-06073	4-12
	17-10
	22-3
09106-06075	5-28
09106-06076	5-29
09106-06090	42-13
09106-07009	2-4
09106-08105	36-7
09106-08121	38-36
	38-36
09106-08137	51-21
09106-08147	38-9
09106-08160	54-11
	61-8
09106-10069	3-23
09106-10084	3-24
09106-12003	37-7
09111-06041	25-15
09111-06085	21-23
09111-06099	44-10

PART NO.	FIG.NO.-REF.NO.
09111-06107	45-12
	57-23
09111-10059	37-2
09116-06130	15-16
09116-06152	59-15
09116-06186	30-11
09118-06097	17-2
	20-3
09118-08152-A05	16-17
09119-06104	31-13
09125-05042	42-24
09125-06073	59-6
09126-06011	25-10
09128-06013	28-4
09132-03008	30-7
09132-04032	32-14
09132-05053	45-6
	46-20
	47-14
09136-05062	31-11
	40-13
09136-06105	40-20
09139-05025	45-8
09139-05077	45-5
09139-05503	46-11
09139-05504	46-9
09139-06027	16-18
09139-06028	63-10
09139-06029	39-8
09139-06107	6-10
09139-06129	41-4
09139-06131	41-7
09139-06146	41-9
09139-06168	59-18
09139-06190	40-15
	49-21
09139-06191	39-17
	39-18
09139-08016	34-23
09140-06020	25-33
09140-06025	25-34
09148-04034	40-8
09148-05038	47-10
09159-05019	45-10
09159-08116	16-19
09159-10103	37-3
09159-10115	60-20
09159-12054	5-46
09159-12056	60-8
	60-11

PART NO.	FIG.NO.-REF.NO.
	60-16
09159-22008	24-48
09159-24010	23-18
09159-25003	59-13
	61-11
09160-06012	39-9
09160-06077	33-13
09160-06126	33-22
09160-06129	41-5
09160-08059	16-20
09160-08142	16-21
09160-10094	42-11
09160-12011	25-35
09160-12036	27-5
09160-15045	23-29
09160-18022	37-9
09160-25056	23-17
09160-25070	59-12
	61-10
09160-25073	23-2
09161-10009	57-14
	58-16
	63-27
09161-13004	38-10
09161-17002	38-11
09164-06006	19-9
09164-14008	9-5
09164-24006	23-19
09167-27003	24-8
09167-30008	24-30
	24-31
	24-32
09168-06023	3-12
	5-23
	5-33
	6-17
	7-5
09168-06025	19-4
09168-06026	21-16
09168-08016	5-10
	5-35
09168-08034	12-14
09168-10002	5-37
09168-10007	4-9
09168-10031	5-6
09168-12017	3-28
09168-14002	5-41
	7-7
	12-16
09168-14015	4-13

PART NO.	FIG.NO.-REF.NO.
09168-16002	5-39
	6-21
09168-16009	3-18
09169-21001	10-7
09180-06261	21-6
09180-06264	33-14
09180-06288	40-21
09180-06290	17-3
	20-4
09180-06306	59-16
09180-08152	16-22
09180-08215	47-4
09180-08216	16-23
09180-19014	10-6
09181-12158	7-18
09181-14167	25-20
09181-20251	24-33
09181-24005	24-34
09181-27014	24-9
09200-06068	63-18
09206-08007	3-4
09208-08019	38-12
09208-08020	38-22
	38-31
	38-31
09247-14036	7-6
09248-10010	5-36
09248-14012	5-40
09248-16012	3-17
	5-38
	6-20
09250-05009	36-5
	42-16
	51-25
09250-06012	44-21
09259-36021	6-18
09261-05006	7-19
09262-25006	25-11
09262-25167	54-3
09262-28052	61-3
09262-32022	61-16
09263-14027	25-21
09263-15003	23-30
09263-17034	60-4
09263-17037	59-4
	60-3
09263-19015	10-5
09263-20040	24-35
09263-20073	60-2
09263-20085	24-10

PART NO.	FIG.NO.-REF.NO.
09263-25018	25-12
09263-28031	9-7
09263-30040	59-3
09263-35013	23-3
09267-25012	24-11
09267-30010	53-3
	53-9
09267-30011	24-36
09269-08003	53-15
09280-04004	5-27
09280-08012	16-24
09280-12012	4-11
09280-13004	7-12
09280-15015	17-9
09280-17003	6-7
09280-17007	10-8
09280-19008	7-10
09280-24003	26-13
09280-33004	6-19
09280-57003	44-16
09280-76005	28-15
09283-14005	25-22
09283-42018	24-37
09284-37001	61-4
09285-06015	23-31
09285-20006	24-12
09285-32004	54-4
09285-39001	61-17
09289-05011	11-10
09319-08045	38-13
09320-06016	40-7
09320-08028	47-5
	47-11
	48-5
	49-22
09320-08071	39-19
09320-09016	40-14
	40-18
	41-8
	49-20
09320-09039	31-7
09320-10051	17-4
	20-5
09320-10066	55-5
09320-12048	16-25
09320-12049	16-26
09321-06032	33-15
09321-10011	51-3
09321-10018	16-27
	48-8

PART NO.	FIG.NO.-REF.NO.
09352-12163-600	39-30
09352-30503-600	17-13
09360-10061	63-25
09360-10062	4-8
	57-11
	57-12
	58-14
	58-15
	63-26
09360-10064	57-13
09360-14012	4-10
09362-09011	21-9
09367-06007	39-29
09380-27004	24-13
09380-27006	24-14
	24-15
09380-30009	24-38
	24-39
	24-40
09381-18003	8-12
09390-62012	24-16
09401-08411	21-24
09401-10409	21-11
09401-12409	21-10
09401-13417	63-17
09401-14101	15-13
	15-14
09401-15101	15-25
09401-16401	15-9
09401-16403	15-26
09401-17201	22-10
09401-17401	22-11
09402-35501	21-12
09402-60208	3-21
09402-70503	16-28
09403-06324	57-24
	63-33
09403-07334	57-25
09403-16412	57-26
09404-06429	7-23
	33-16
	34-10
09404-06435	34-11
09407-10403	44-14
09407-14403	34-13
09407-14407	21-25
	28-8
	33-5
	34-15
	55-12

PART NO.	FIG.NO.-REF.NO.
09407-14408	34-12
09407-18402	12-17
	34-14
09408-00266	55-8
09409-06314-5PK	40-17
	45-15
	46-4
	49-12
09409-06329	40-19
09409-07332	46-26
09409-07333	44-5
	46-5
09409-08327	46-12
09420-04008	27-8
09440-05003	38-23
	38-32
	38-32
09440-17009	25-23
09443-06012	34-28
09443-13032	37-12
09443-14068	37-4
09443-19015	37-5
09444-20001	25-24
09448-14046	38-14
09471-12140	33-11
09471-12186	32-3
	32-6
	32-10
	32-13
09471-12188	31-8
09471-12216	31-10
09471-12222	31-9
09481-10501	34-2
09481-15101	34-4
09481-15501	34-3
09481-30501	28-3
09482-00555	3-19-5
09482-00556	3-19-3
09482-00557	3-19-2
09482-00558	3-19-1
09482-00559	3-19-6
09482-00560	3-19-4
09493-20012	5-22
09493-36006	5-30
09800-21056	44-15

PART NO.	FIG.NO.-REF.NO.

SUZUKI **GSX1300RAL4** PARTS CATALOGUE

SUZUKI MOTOR CORPORATION All rights reserved
No part of this document may be reproduced or transmitted in any form or by any means, electronic or mechanical, for any purpose, without the express written permission of Suzuki Motor Corporation.

SUZUKI MOTOR CORPORATION
Technical Readiness Group, Automobile Field Quality Assurance Department
300 Takatsuka, Minami, Hamamatsu, Japan

Reprint Prohibited

SUZUKI MOTOR CORPORATION

PRINTED IN JAPAN

9900B-30903-000